Rethinking Multifamily Heat Pumps

Is there a better option between central systems and terminal units?

Robert Benjamin, CEO, Aris Hydronics

NEEA Product Council · November 10, 2026

What we will cover

aris

1. Beyond the unit: the system opportunity
2. One building and its loads
3. Five ways to heat and cool it
4. Two ways to make hot water
5. Heating, cooling and hot water together
6. Multiplex: shared plants
7. Why shared plants need less equipment, wiring and space
8. Research underway and discussion

The challenges and opportunities are at the system level

Equipment is rated and tested as an isolated appliance under set conditions.

A multifamily building runs as one connected system under dynamic conditions.

Terms

Indoor and outdoor unit	A compressor outdoors and an indoor unit, joined by a line set
Line set	Two insulated refrigerant pipes, suction and liquid, plus control cable
Hydronic piping	One or more pairs of supply and return water pipes
Monoblock	Outdoor air-to-water heat pump; refrigerant sealed inside
Fan coil	Indoor unit that heats or cools with water and a fan
Thermal storage	A tank of heated or chilled water
Multiplex	Several heat pumps combined into one plant to serve a group of separate spaces
Multifunction	One system for heating, cooling and hot water
Load decoupling	Storage between the plant and the rooms, so each runs on its own schedule

Our test case: a 4-story, 35-apartment building in Portland



35 apartments

4 stories, plus basement

4C climate zone

90.1 ASHRAE 2022 envelope

25,314 ft² of apartments

Typical floor, floors 2–4: nine apartments

Typical floor, floors 2–4: nine apartments

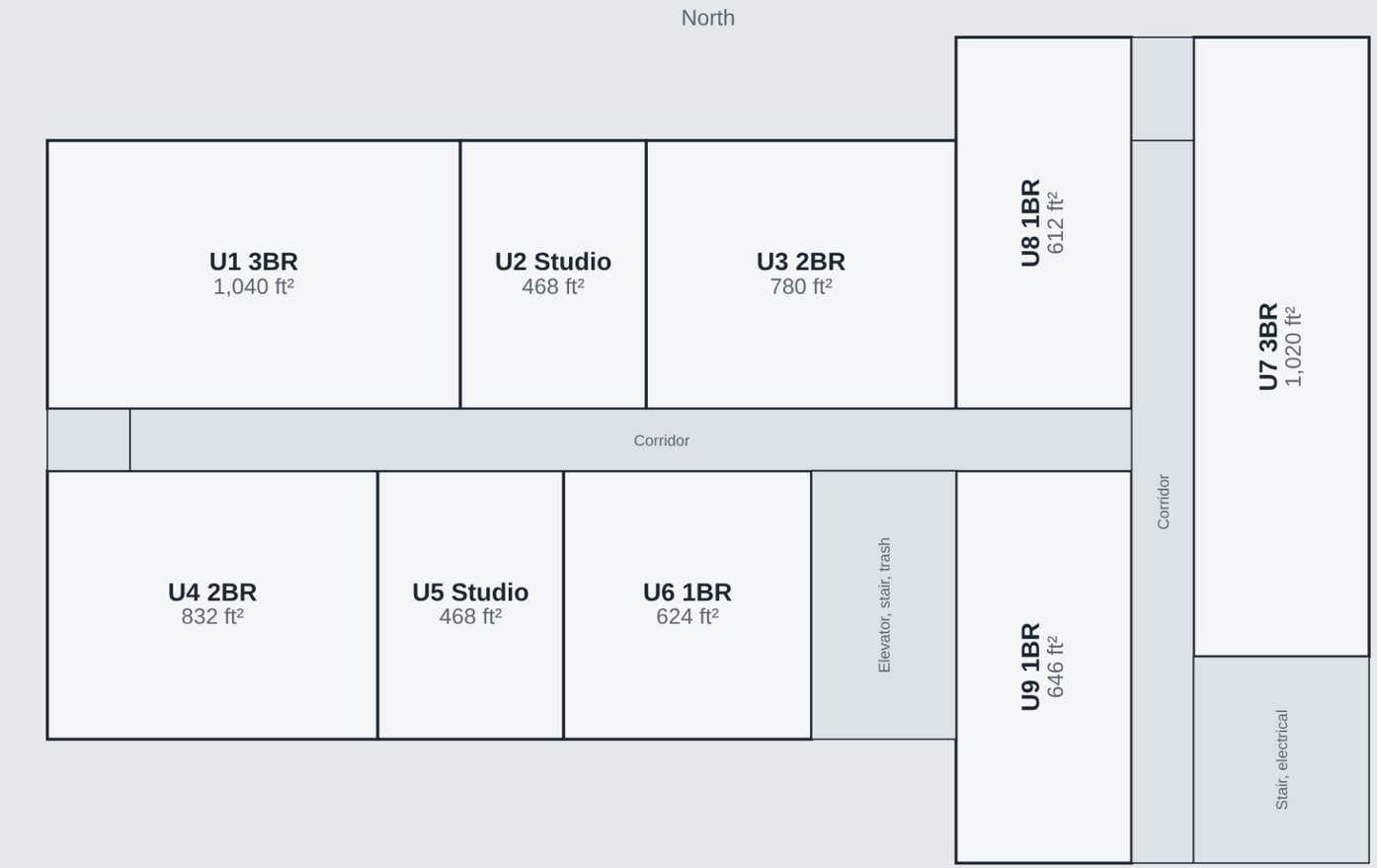

Apartments range from 468 ft² (studio) to 1,040 ft² (three-bedroom).

Apartments vary too, from studios to three-bedrooms

U2 studio, 468 ft² (north side)

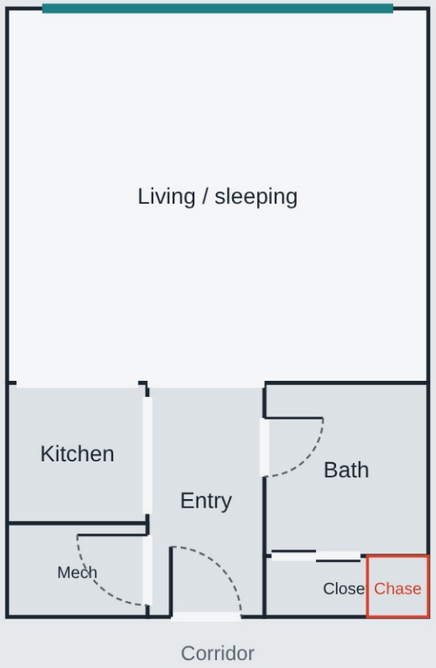

1 person · 1 window · about 1,050 Btu/h of heat from people, lights and appliances when home

U4 2-bedroom, 832 ft² (southwest corner)



3 people · 5 windows · about 2,150 Btu/h of heat from people, lights and appliances when home

U7 3-bedroom, 1,020 ft² (wing, east side)

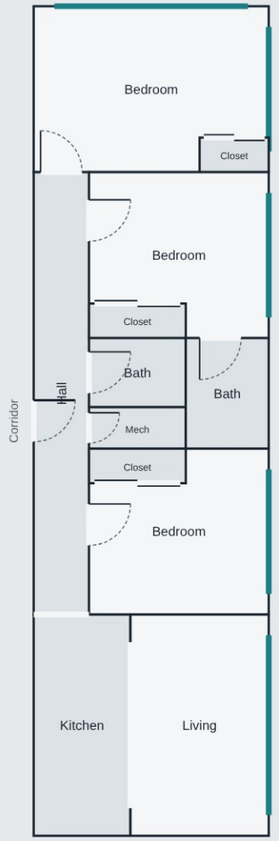

4 people · 5 windows · about 2,750 Btu/h of heat from people, lights and appliances when home

Peak heating loads vary 6.8× from apartment to apartment

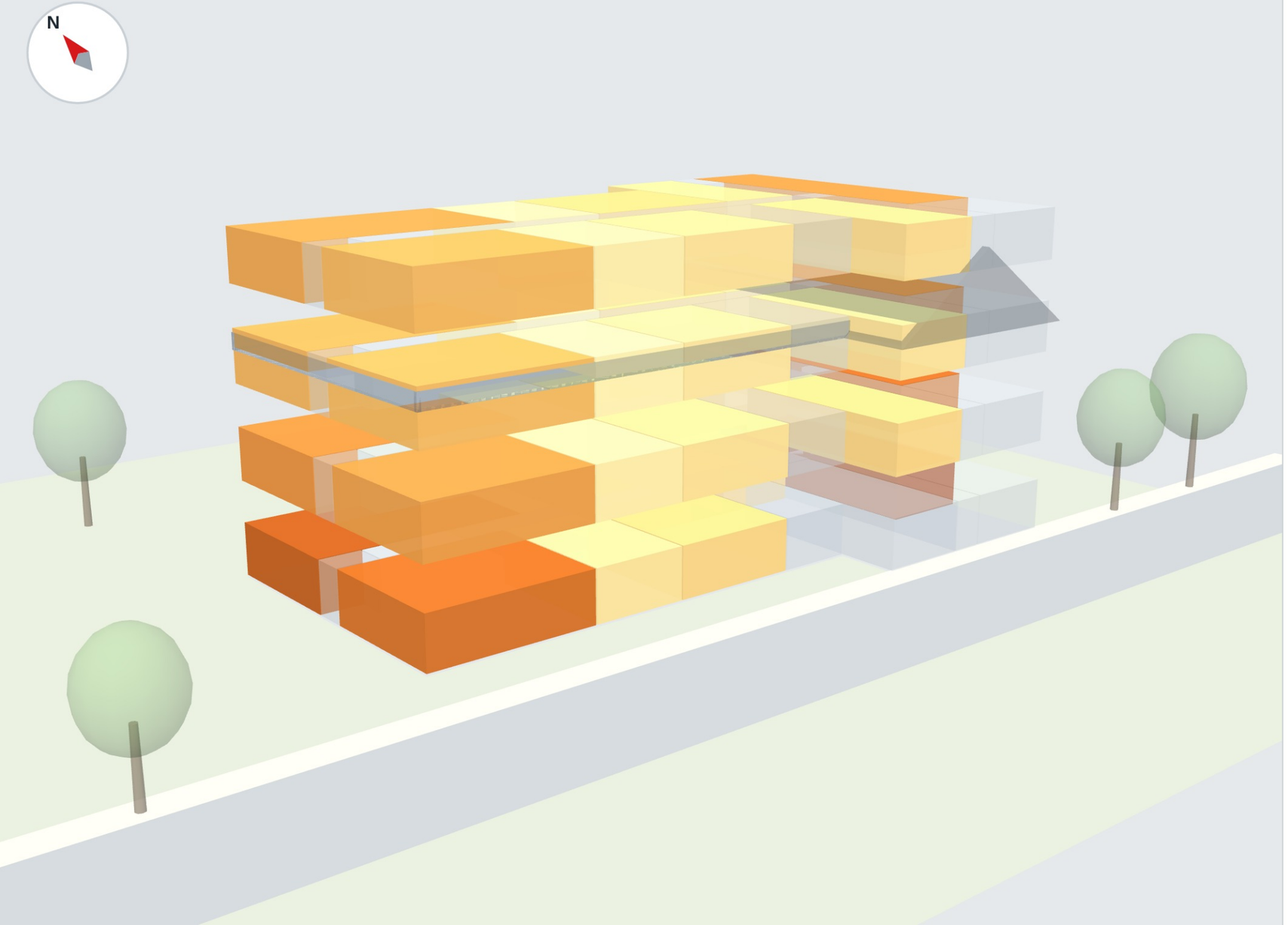

Design day 21.9°F outdoors, 70°F indoors
ASHRAE peak load method

206k Btu/h, whole building

2.1k smallest apartment

14.2k largest apartment

Cooling loads drive the design in this building

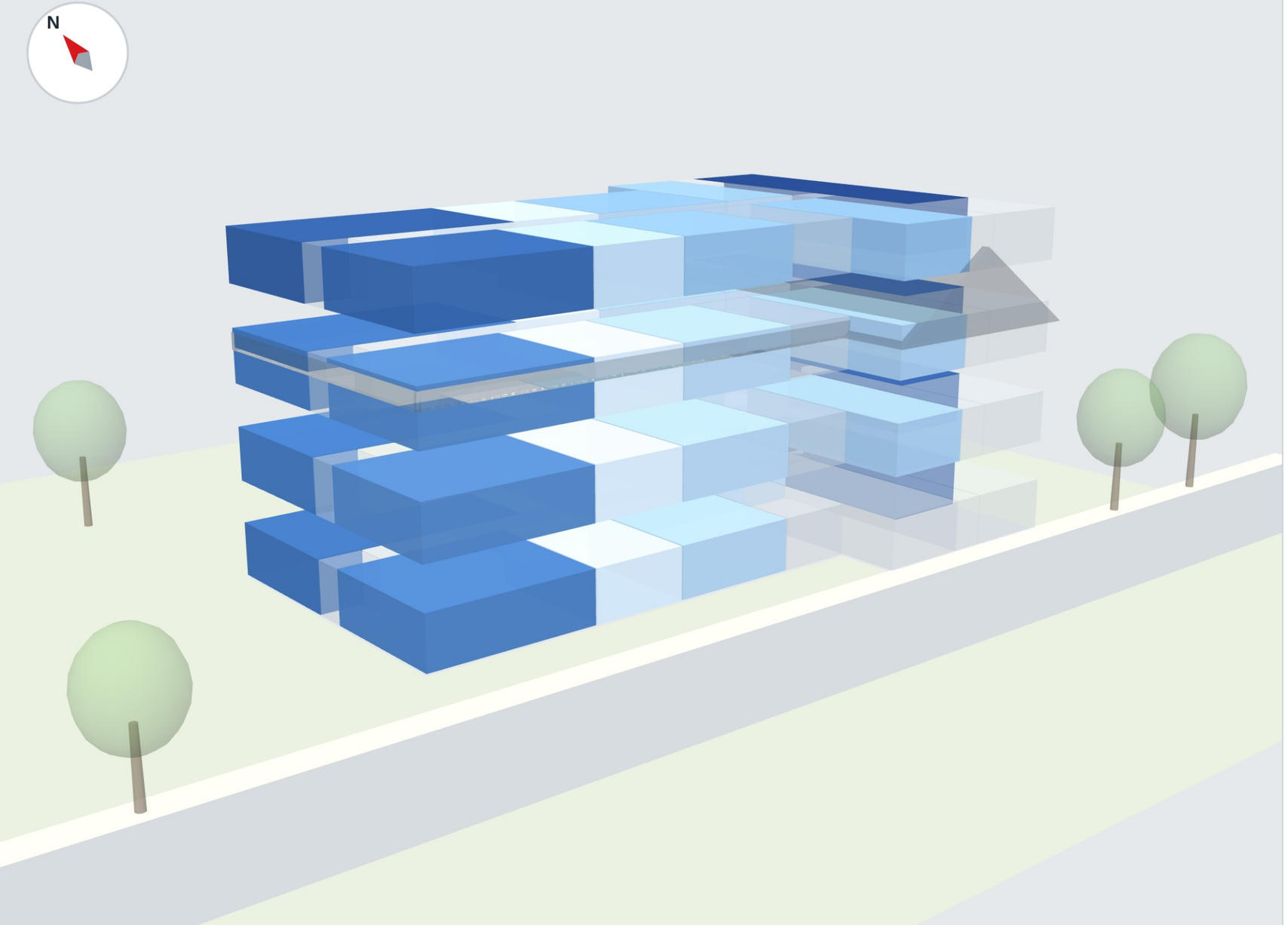

Design day 91°F outdoors, 75°F indoors
ASHRAE peak load method

274k Btu/h, whole building

2.6k smallest apartment

15.5k largest apartment

The building's cooling peak is 15% smaller than the sum of apartment peaks

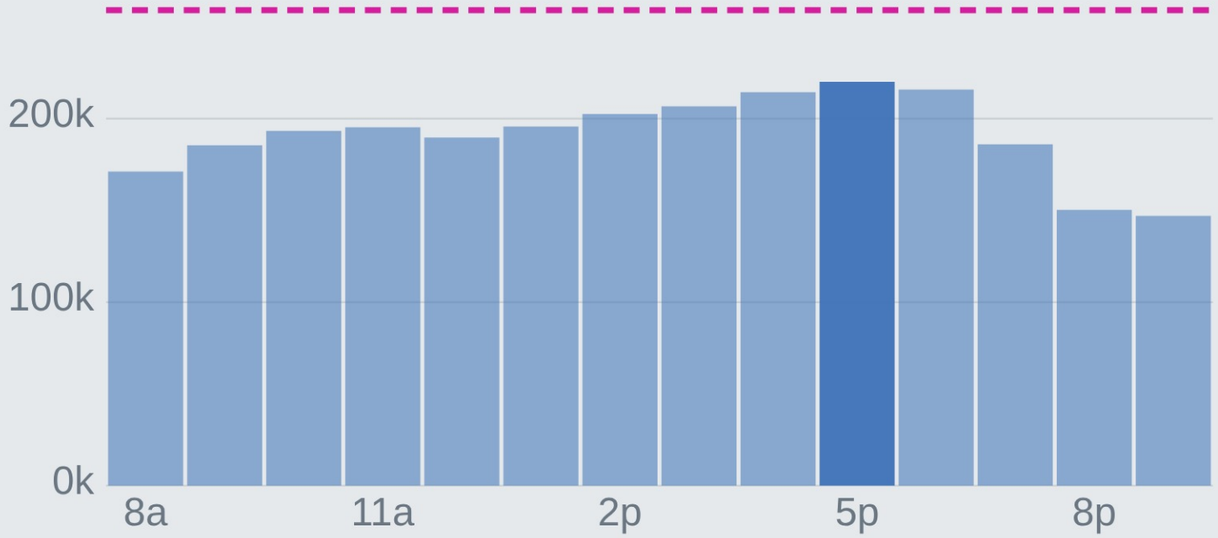

Building cooling load, Btu/h, each hour of the 91°F design day

259k sum of each apartment’s own peak (dashed line)

220k building peak, 5 pm standard time

15% smaller: apartments peak at different hours

East apartments peak in the morning, west apartments in the evening. All 35 apartments, standard time.

Simulation: loads change hour by hour through the year

aris

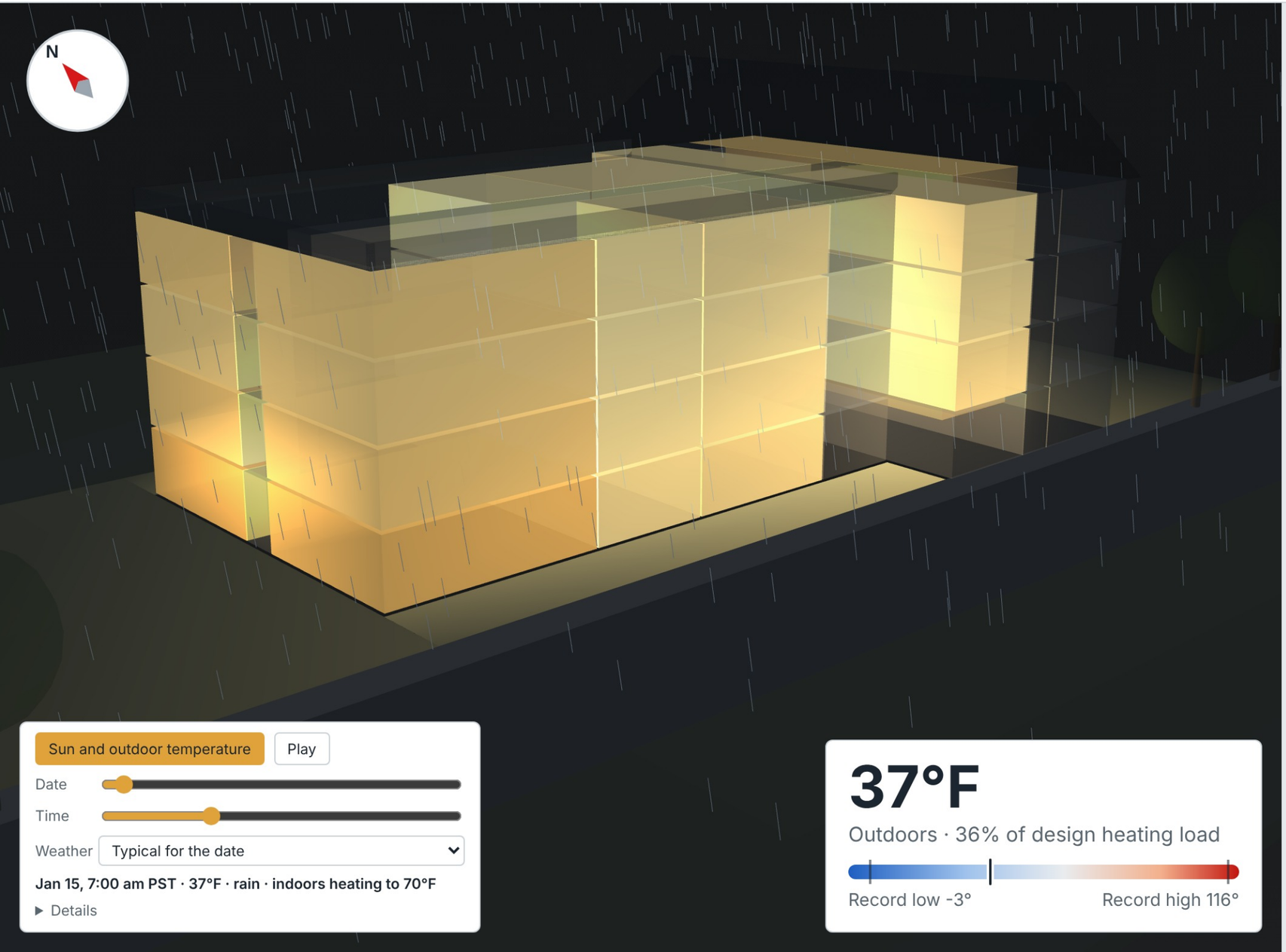

35 heating to 70°F

0 cooling to 75°F

0 idle

Five ways to heat and cool the same building

1. Multi-split heat pumps
2. Ducted split heat pumps*
3. Packaged heat pumps
4. Window and wall-mounted heat pumps
5. Multiplex: shared plants for heating, cooling and hot water

* DOE prototype baseline

Multi-split: an outdoor unit for each apartment, a wall head in each room

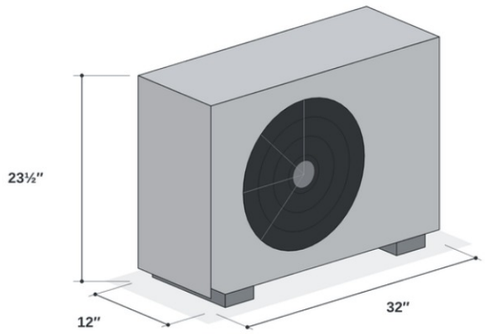

Single-zone outdoor unit

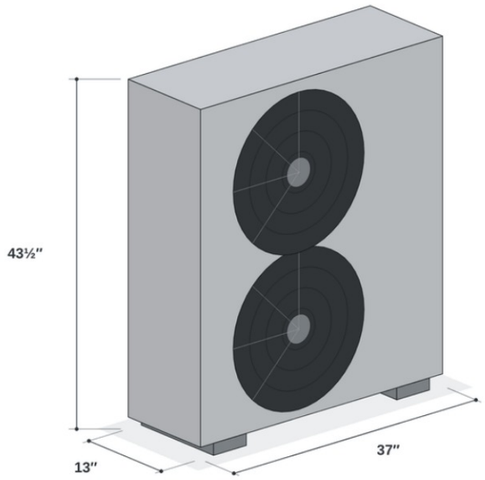

Multi-zone outdoor unit

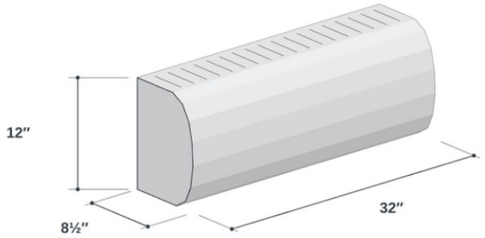

Wall head (indoor unit)



Refrigerant line set

In two apartments: an outdoor unit each, a line set to every room

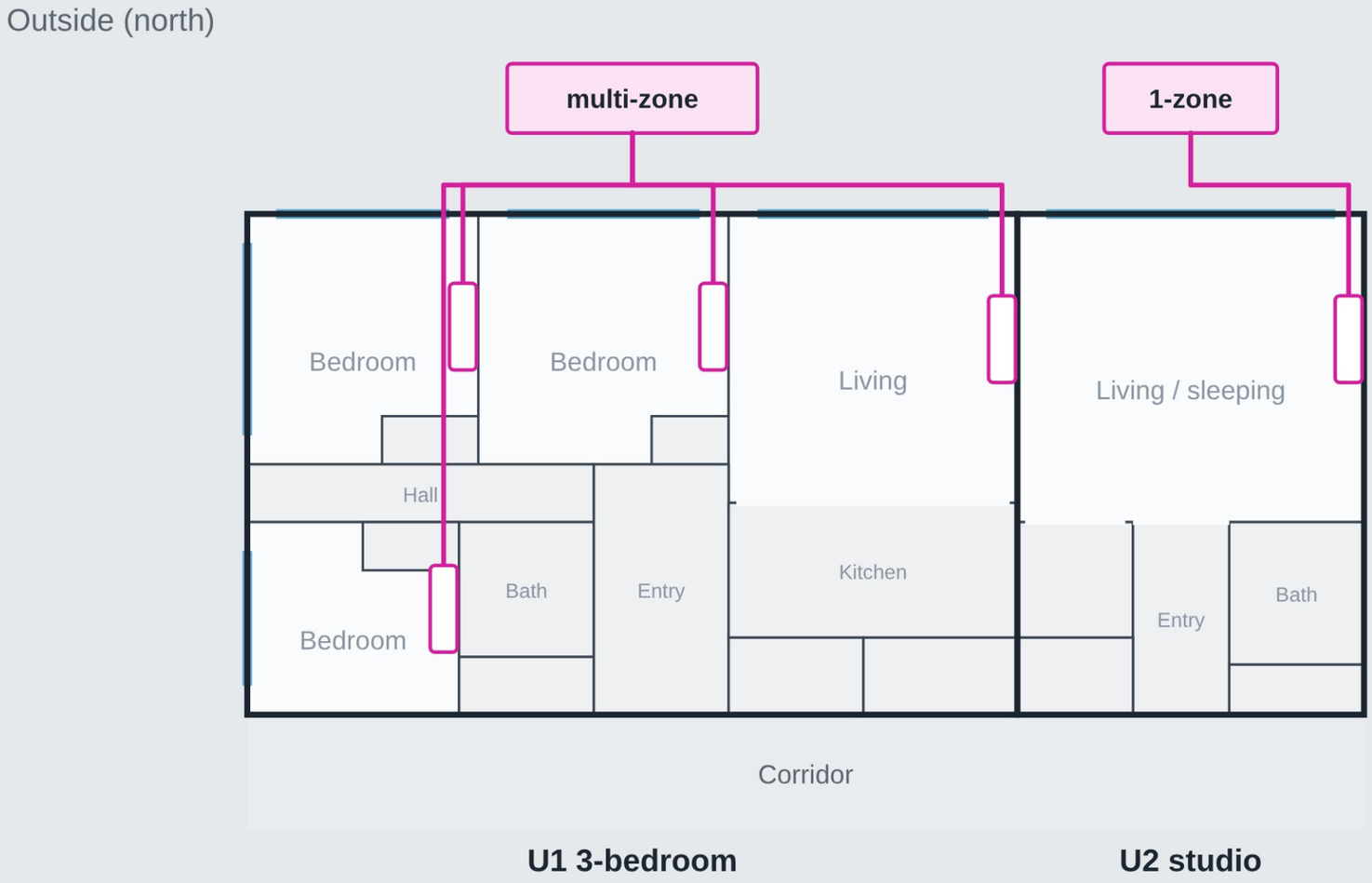

Multi-split in the building: 84 line sets

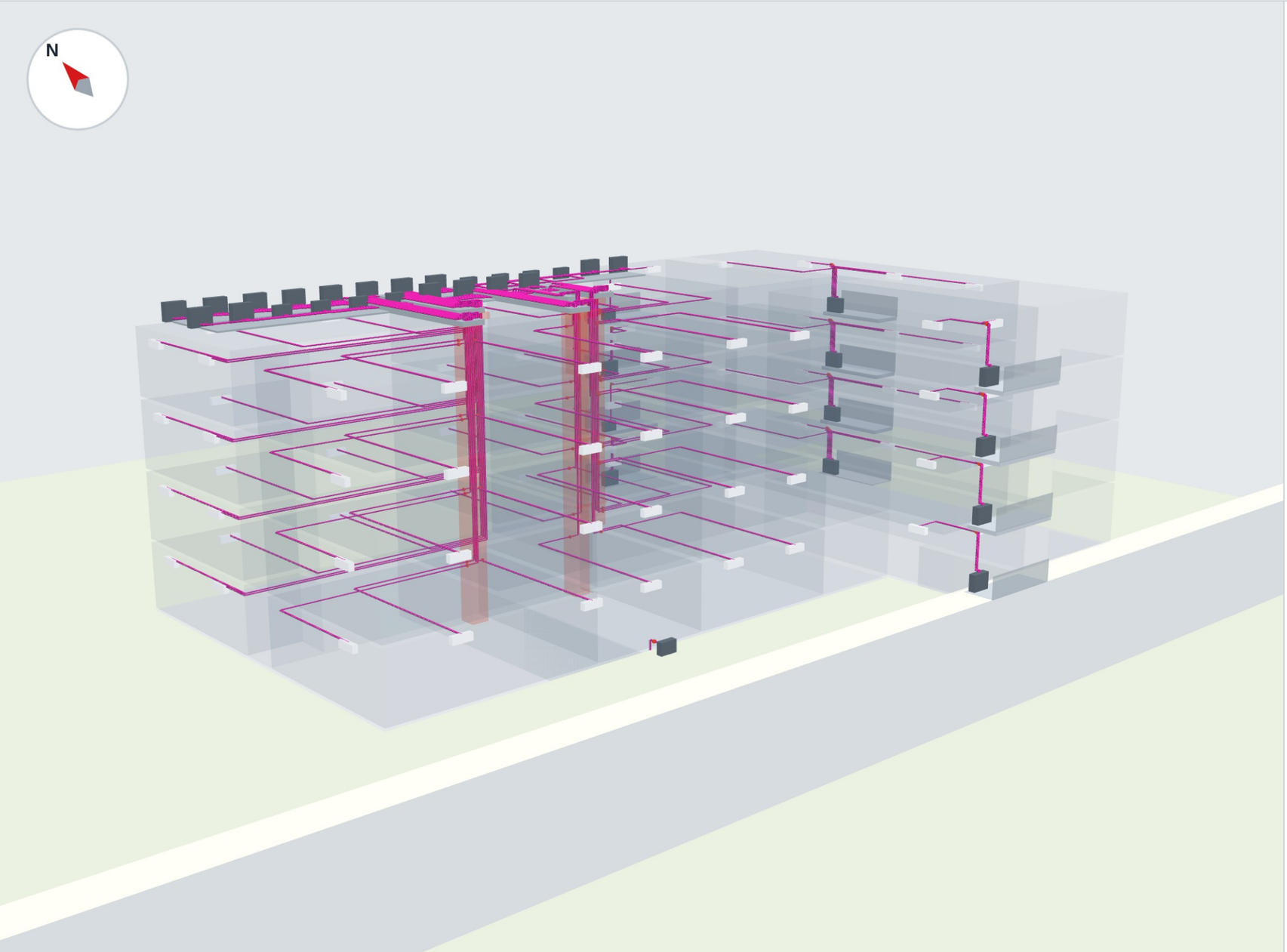

35 outdoor units

84 wall heads

84 line sets

Equipment schedule

1	single-zone outdoor units	9,000 Btu/h	(¾ tons)
↳ **1**	wall heads on them	9,000 Btu/h	(¾ tons)
9	single-zone outdoor units	6,000 Btu/h	(½ tons)
↳ **9**	wall heads on them	6,000 Btu/h	(½ tons)
8	multi-zone outdoor units, 4 ports	36,000 Btu/h class	(3 tons)
↳ **31**	wall heads on them	6,000 Btu/h	(½ tons)
↳ **1**	wall heads on them	9,000 Btu/h	(¾ tons)
17	multi-zone outdoor units, 3 ports	24,000 Btu/h class	(2 tons)
↳ **42**	wall heads on them	6,000 Btu/h	(½ tons)

Ducted split: an air handler in each apartment closet

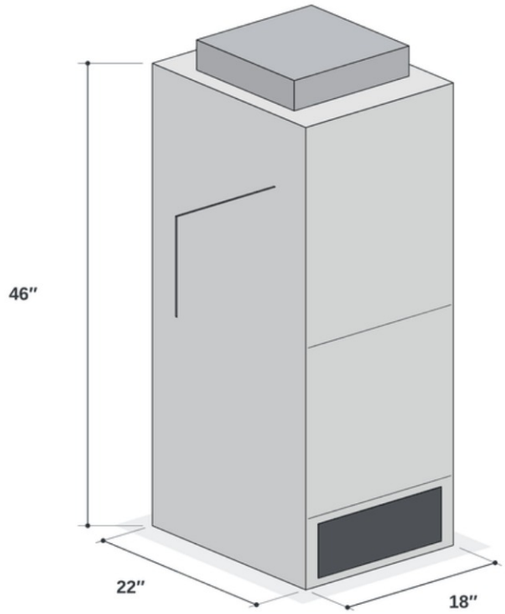

Closet air handler

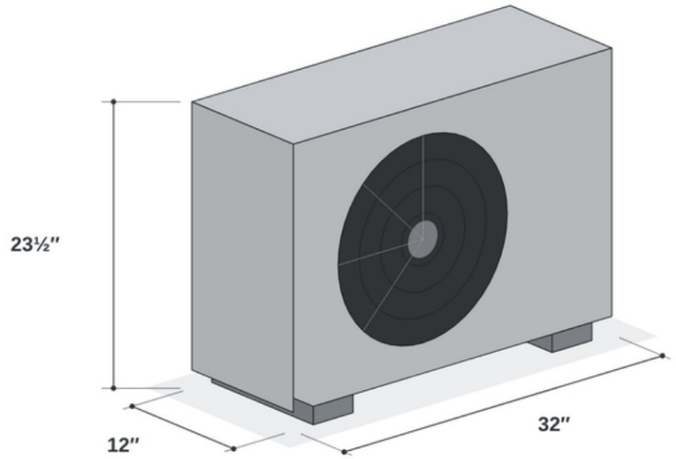

Single-zone outdoor unit



Refrigerant line set

In two apartments: one line set each, ducts to the rooms

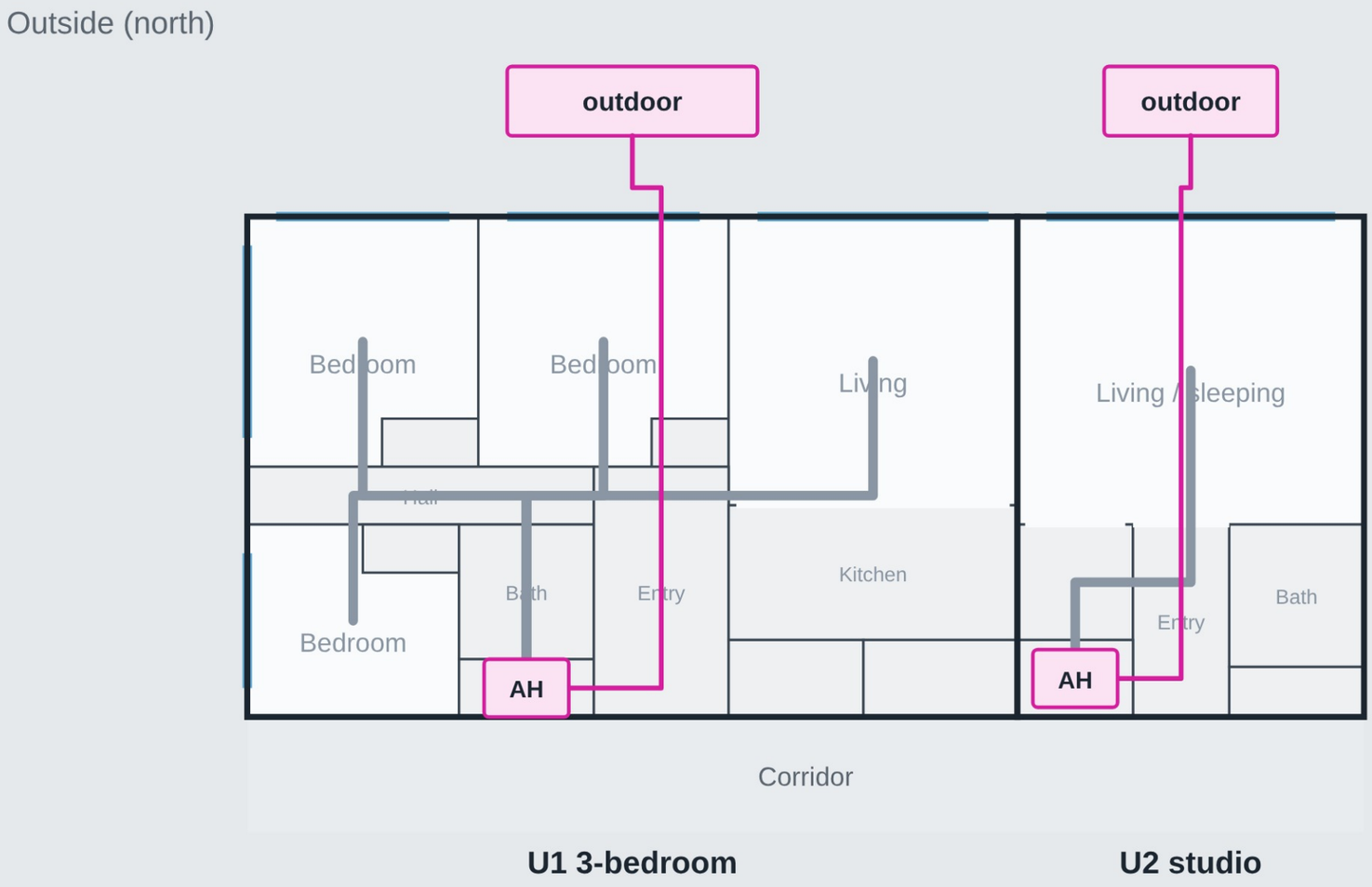

The DOE prototype baseline: one ducted split system per apartment

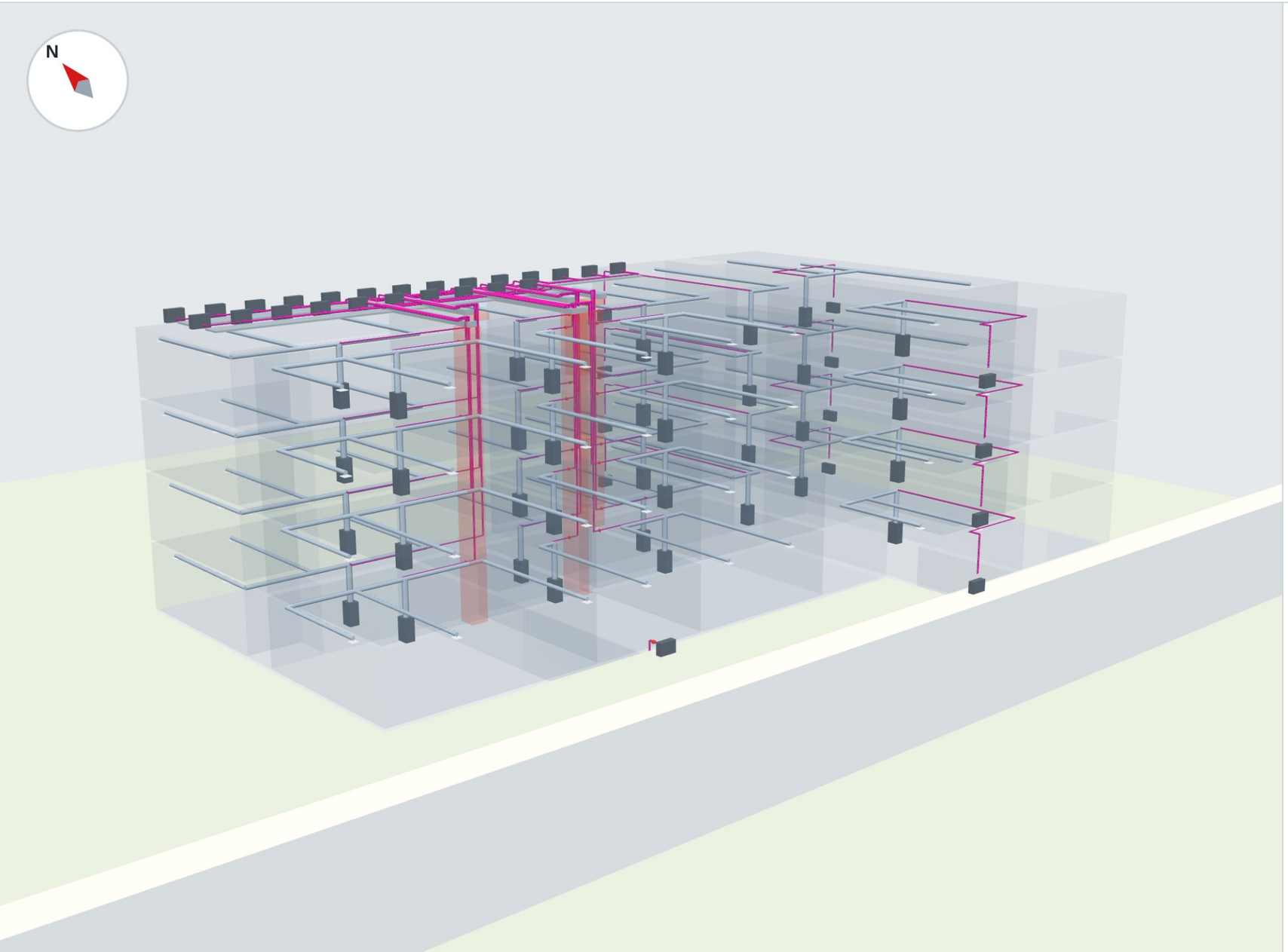

35 air handlers

35 outdoor units

35 line sets

2,800 feet of supply duct, as drawn

Equipment schedule

29	air handler + outdoor unit pairs	12,000 Btu/h (1 ton)
6	air handler + outdoor unit pairs	18,000 Btu/h (1½ tons)

Packaged: all refrigerant sealed in a unit at the exterior wall

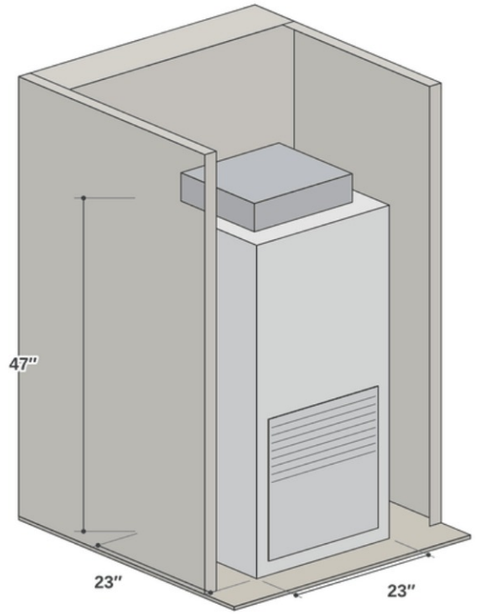

Vertical packaged heat pump

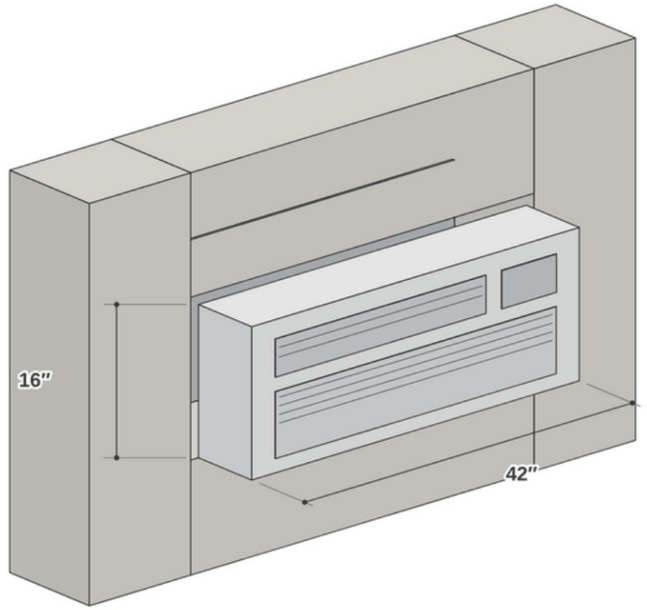

Through-wall heat pump

In two apartments: one packaged unit each, ducts and a through-wall unit

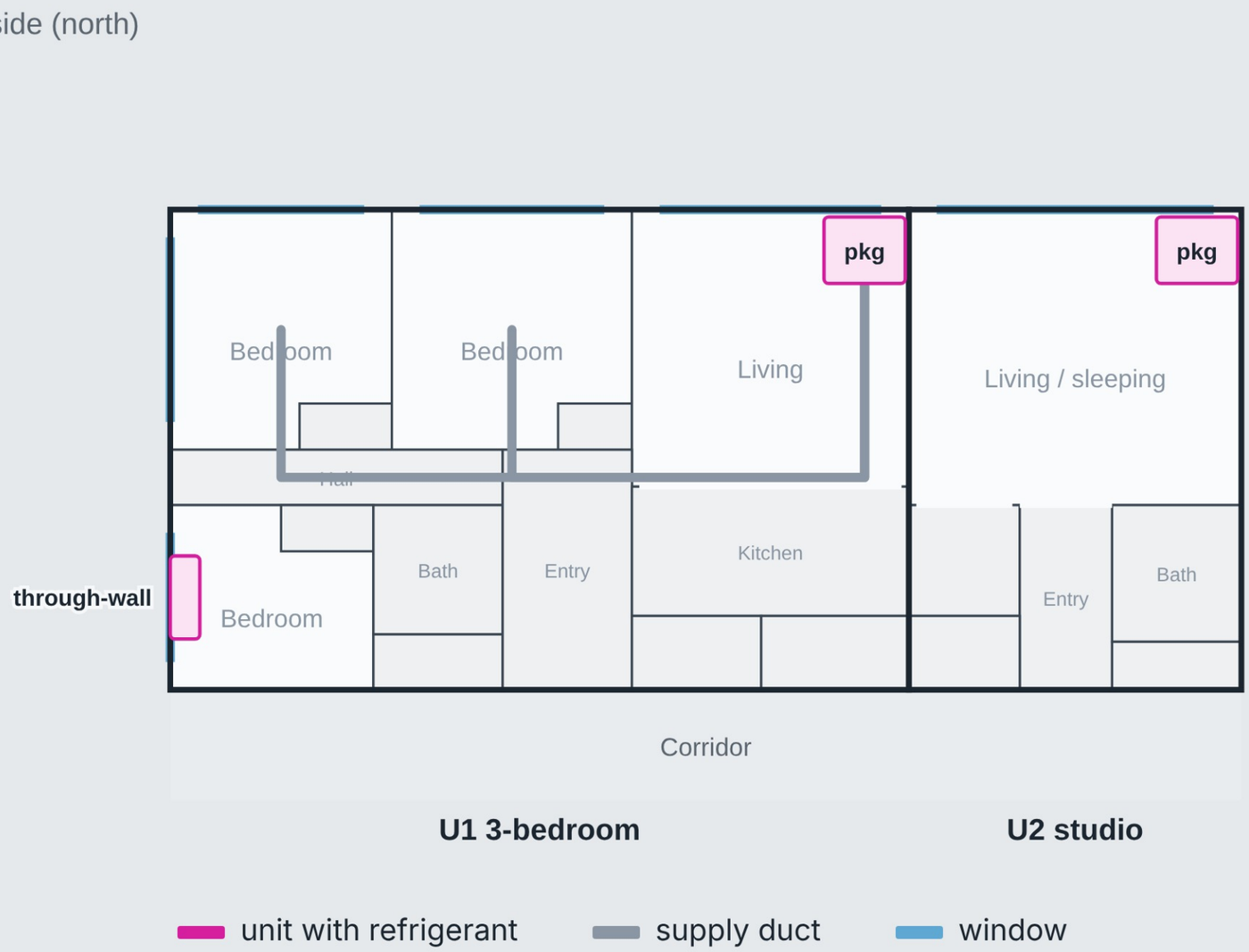

35 packaged units, plus 8 through-wall units for far bedrooms

aris

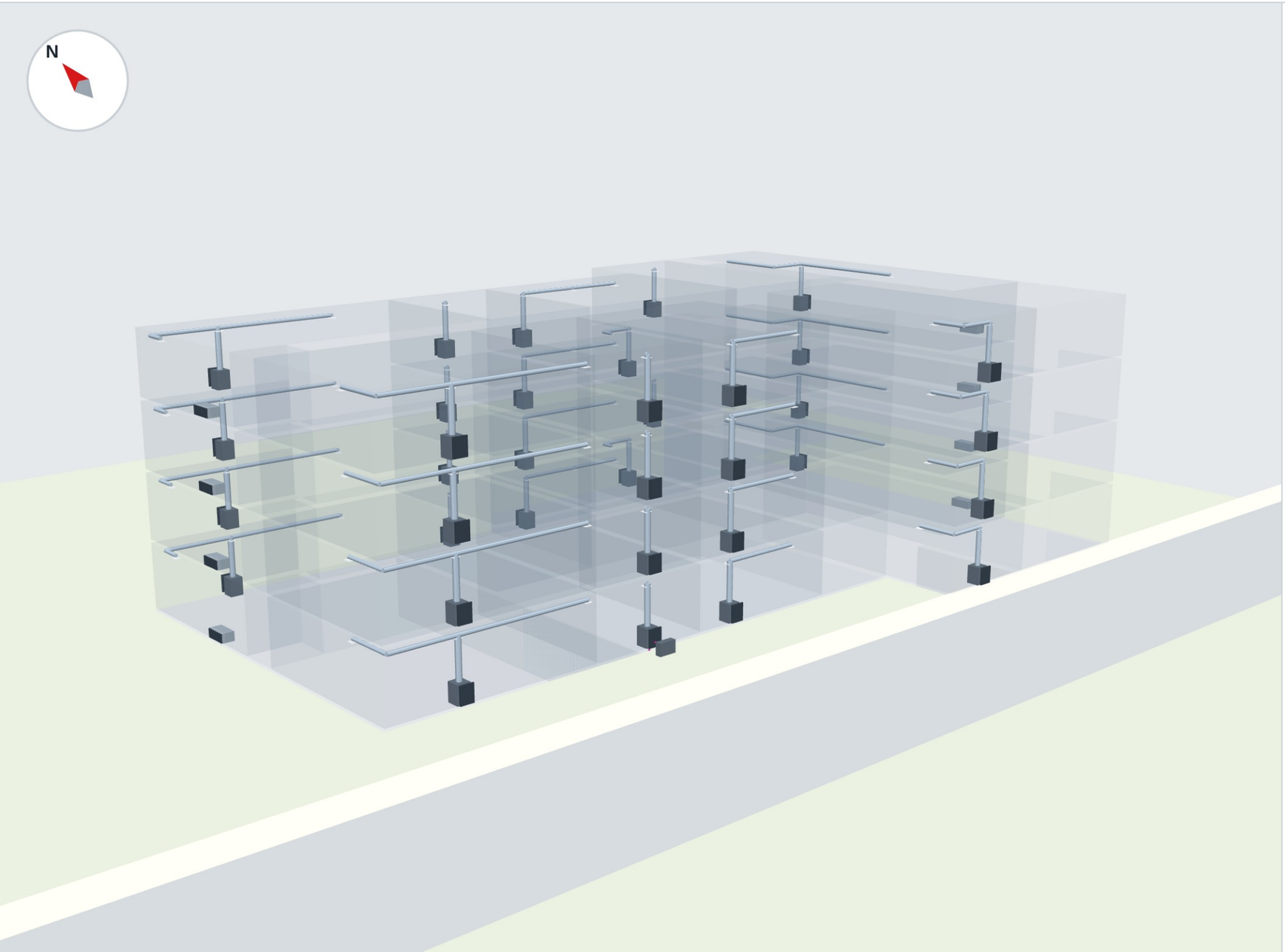

35 packaged heat pumps

8 through-wall units

43 wall openings

Equipment schedule

26	vertical packaged heat pumps	9,000 Btu/h class	(¾ tons)
7	vertical packaged heat pumps	12,000 Btu/h class	(1 ton)
2	vertical packaged heat pumps	18,000 Btu/h class	(1½ tons)
8	through-wall heat pumps, far bedrooms	7,000 Btu/h	(½ tons)

Duct reach about 22 ft, estimated from the fan's rated external static.

Window and wall-mounted: a heat pump in every room

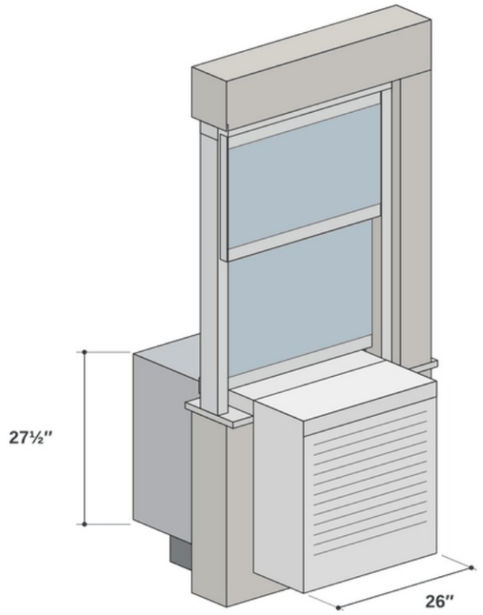

Window heat pump

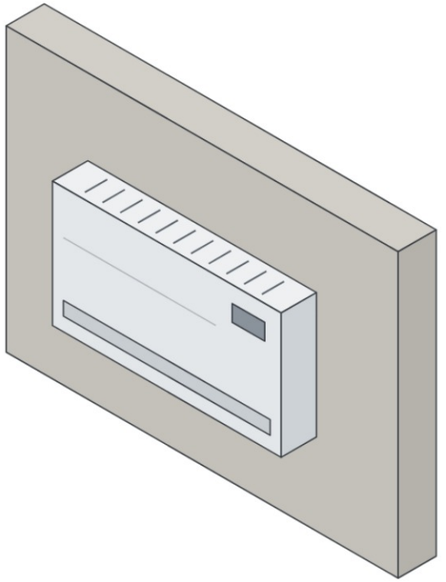

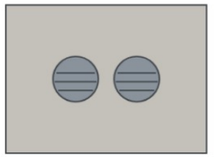

Outside: two round wall hoods

Short-ducted wall-mounted heat pump: outdoor air through two round wall holes

In two apartments: one heat pump in every room

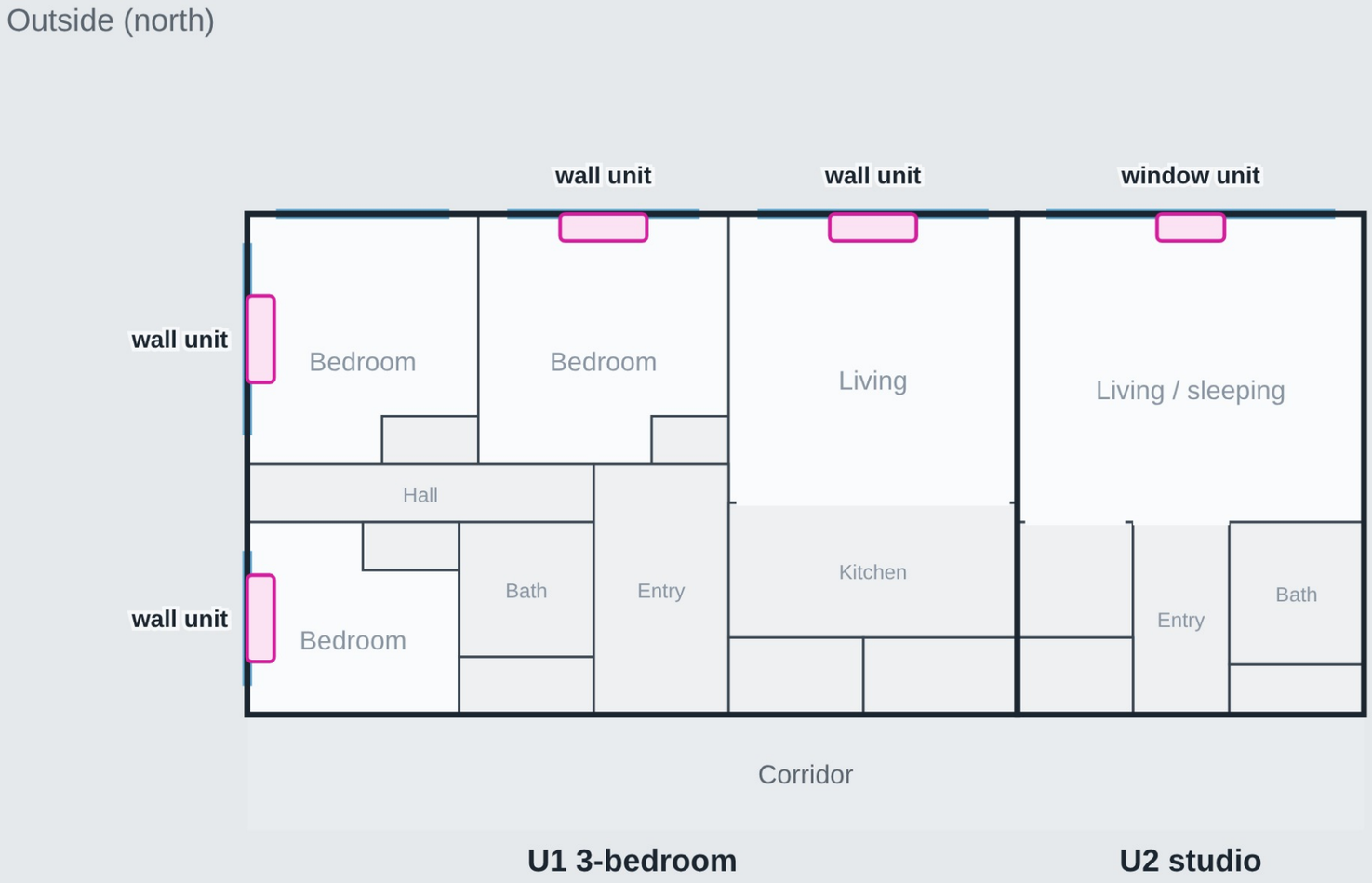

84 room heat pumps, 56 of them mounted on the wall

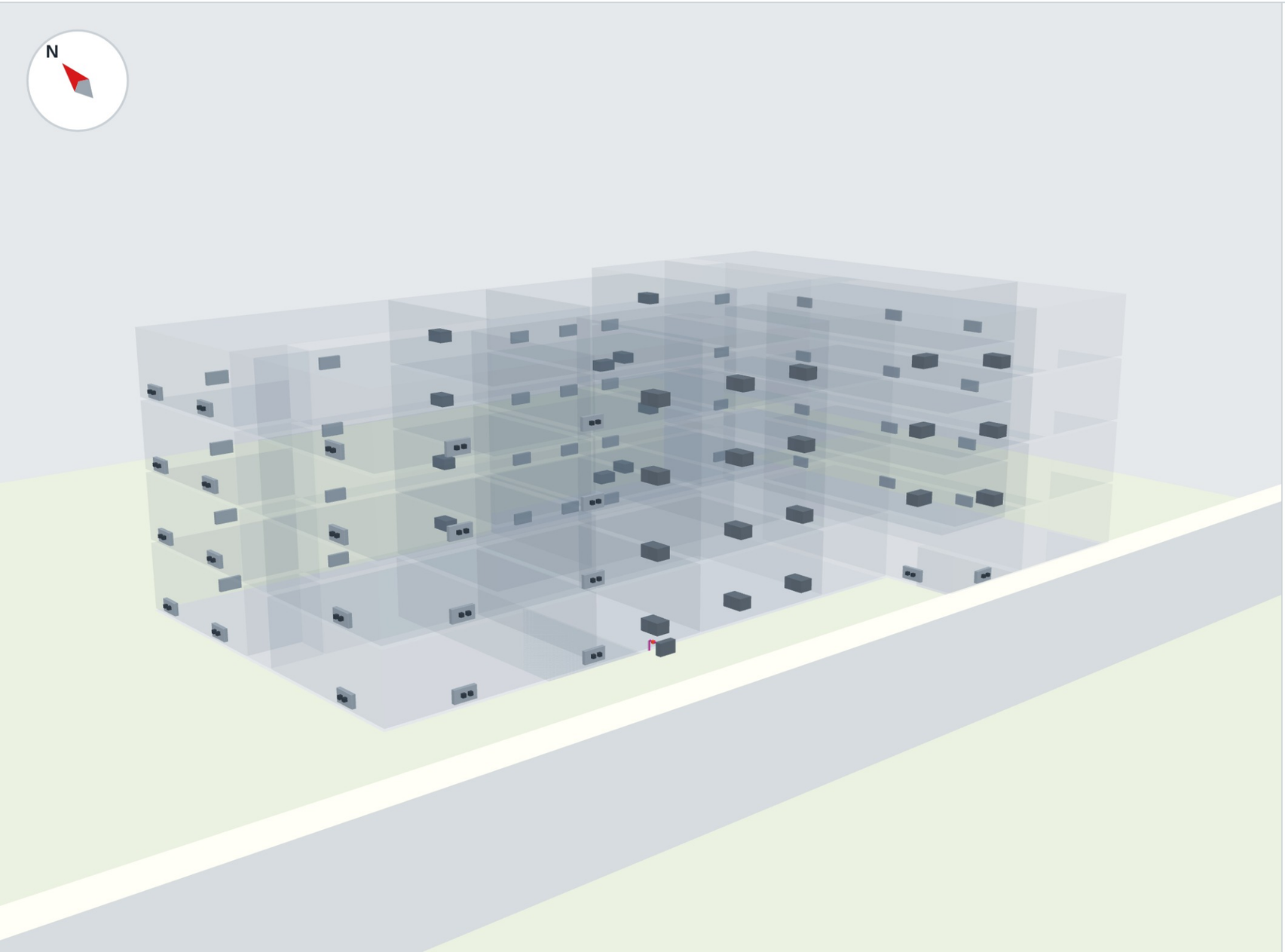

28 window heat pumps

56 wall-mounted heat pumps

112 wall holes

Equipment schedule

28	window heat pumps	9,000 Btu/h	(¾ tons)
56	wall-mounted heat pumps*	7,000 Btu/h	(½ tons)

* Modeled at through-wall heat pump ratings until a product is chosen.

What about hot water?

Every design so far heats and cools. None of them makes hot water.

First the hot water loads, then the two ways it is done today.

Hot water energy is highest in winter, when inlet water is coldest

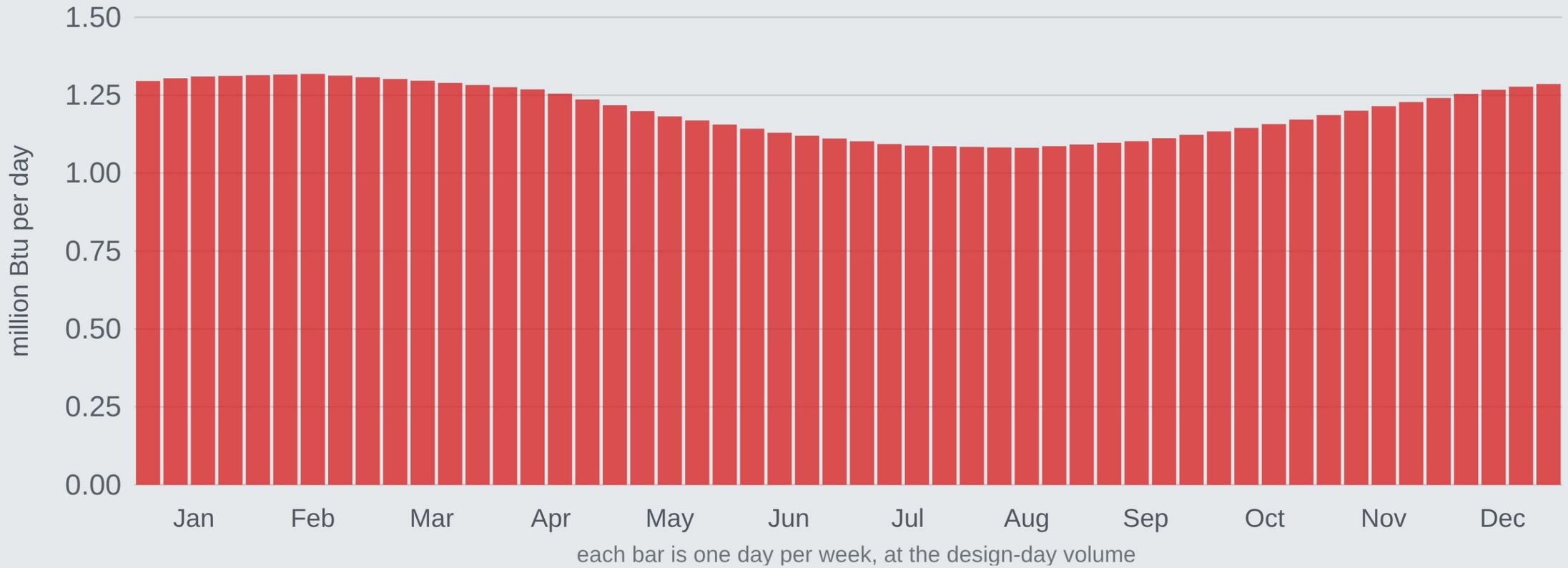

Million Btu a day to heat 2,177 gallons to 120°F, by week: 1.32 in winter to 1.08 in summer. Inlet water 47–61°F (Ecosizer monthly values for Portland, interpolated by week). Gallons held at the design day.

Sizing is set by the peak hour of the design day: about 200k Btu

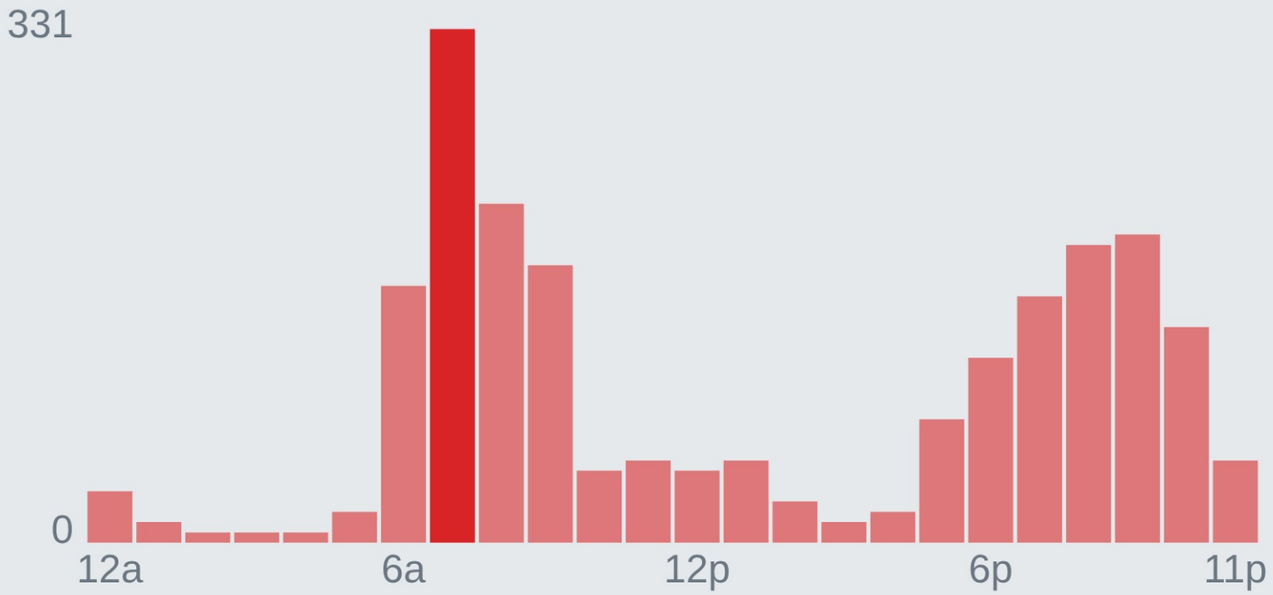

Gallons per hour on the design day

2,177 gallons a day at 120°F, design day

331 gallons in the peak hour, 7–8 am

200k Btu in the peak hour

1.3M Btu on the design day, coldest inlet water

Peak hour is 3.6× the average hour. Ecotope Ecosizer method: 87 people × 25 gal/day, 47°F inlet. Now we have all three loads: heating, cooling and hot water.

Two ways hot water is done today

1. A heat pump water heater in each apartment
2. A central split heat pump water heater

Also emerging: split heat pump water heaters for each apartment. Not shown here.

Option 1: a heat pump water heater in each apartment, ducted

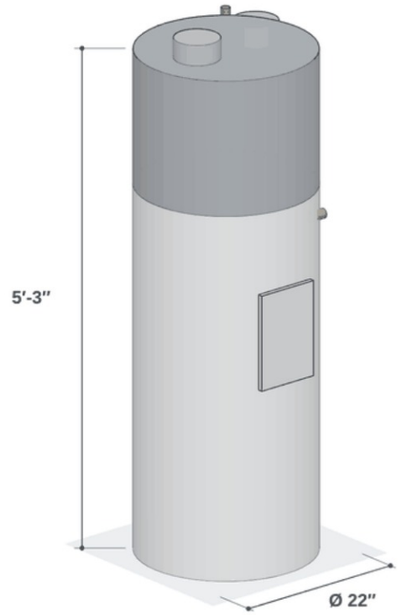

Heat pump water heater

Shown ducted to outdoors so each one gets the air it needs.

35 water heaters, 35 more compressors inside apartments

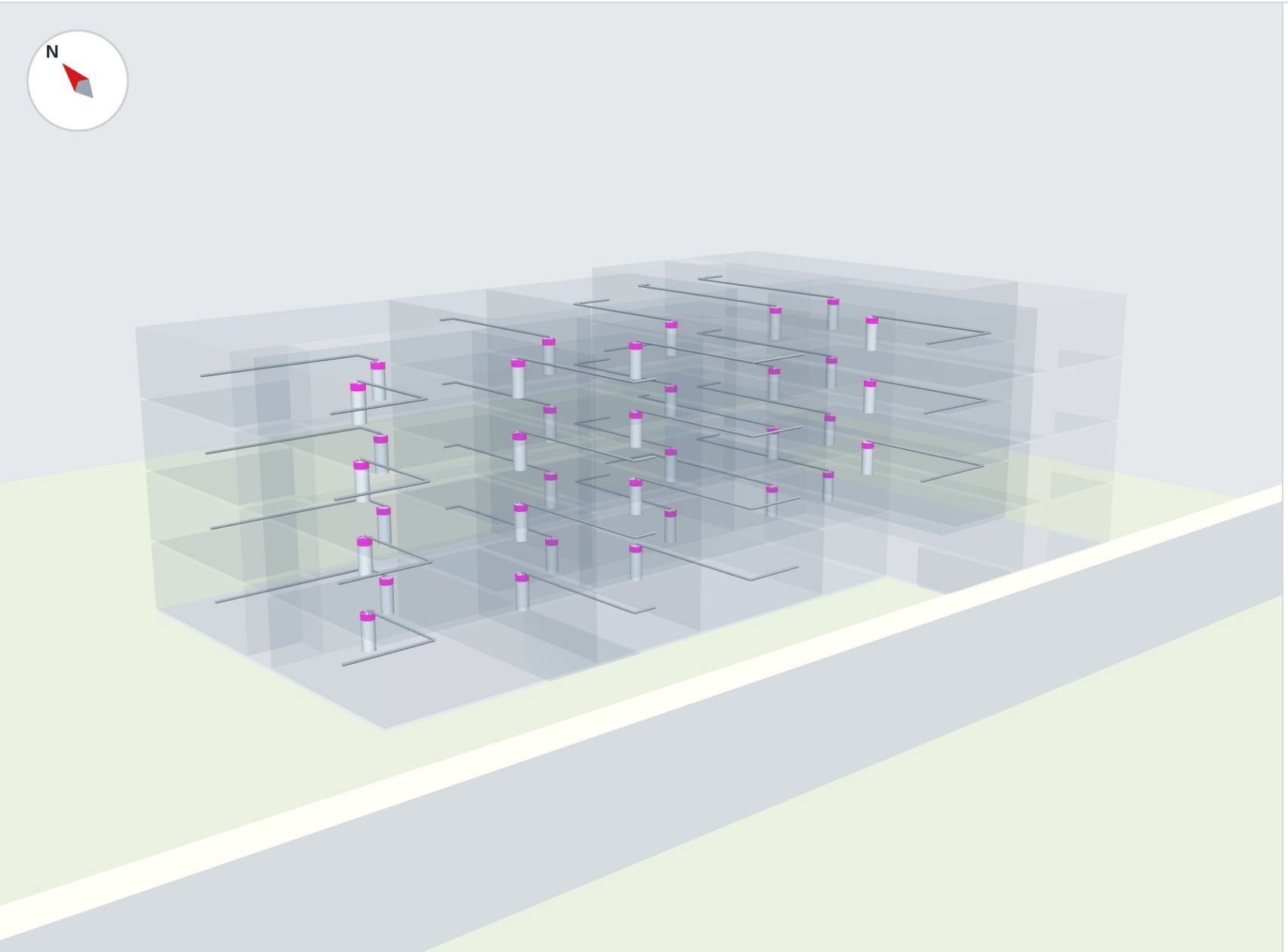

35 heat pump water heaters

35 more compressors in apartments

70 wall openings for ducts

Option 2: a central split heat pump water heater

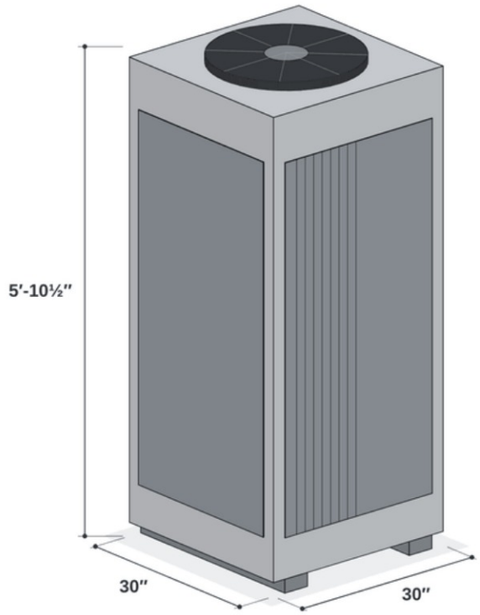

CO2 heat pump water heater

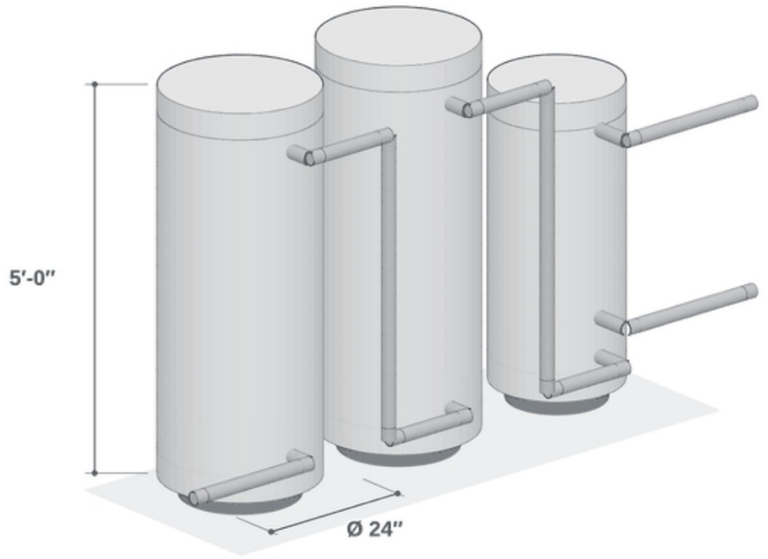

Central hot water storage

CO2 heat pumps outdoors; storage tanks and a swing tank in the basement.

Central hot water takes the water heaters out of the apartments, and adds a loop

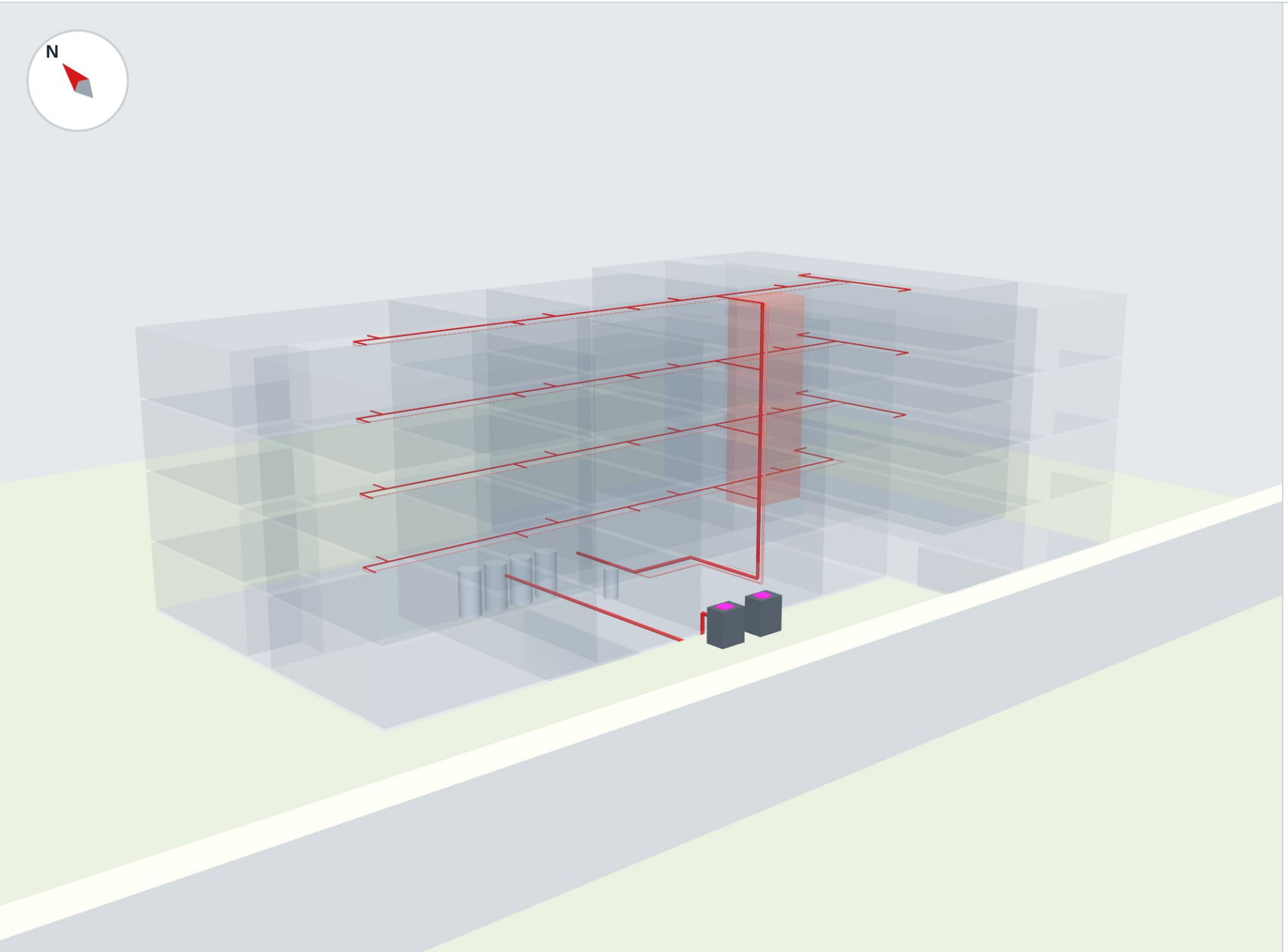

2 CO2 heat pump water heaters

Tanks storage tanks and a swing tank

1 riser and recirculation loop

140°F storage temperature

Both hot water options are a second system to buy and run

In each apartment

- Makeup air: ducting or a louvered closet
- 35 more compressors indoors
- Noise and closet space

Central

- 140°F storage
- Recirculation runs all day and loses heat
- Mechanical room space

Let’s explore multiplex

aris

First, air-to-water heat pumps and what goes with them.

Then several of them combined into one plant.

Air-to-water heat pumps, water loops and storage decouple production from load

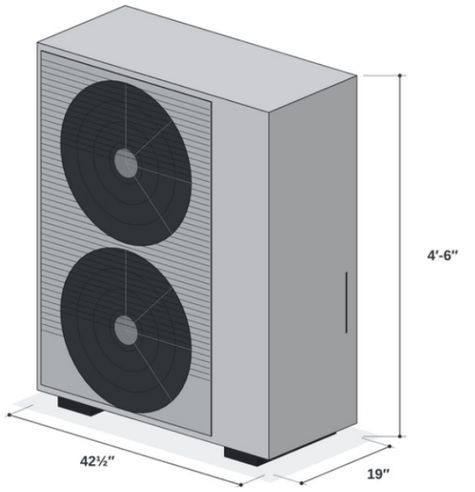

Production

Air-to-water heat pump outdoors.

Refrigerant sealed inside.

closed water loop

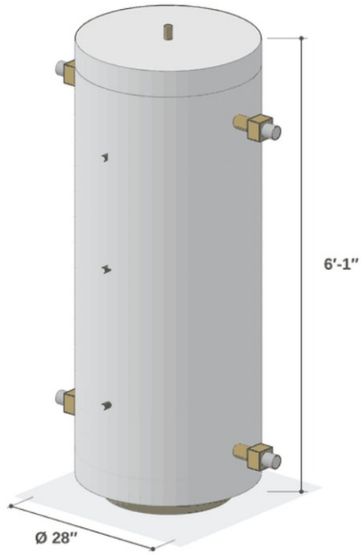

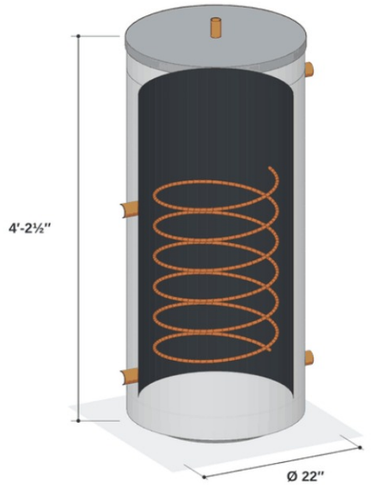

Storage or hot water

A tank of heated or chilled water, or an indirect tank that heats potable water through a coil.

closed water loop

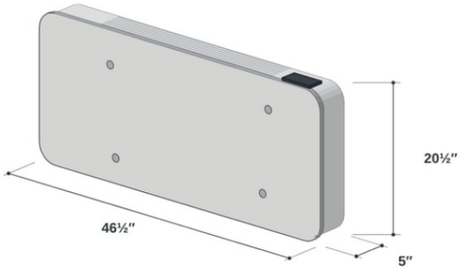

Load

Fan coils take what each room needs, when it needs it.

Balance of plant



Pumps

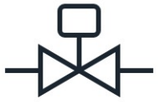

Valves



Relays

Multiplex: two or more heat pumps combined into one plant

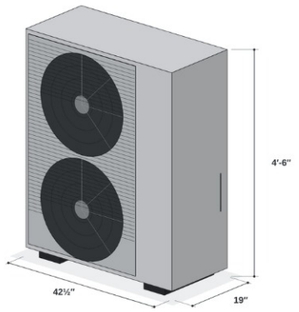

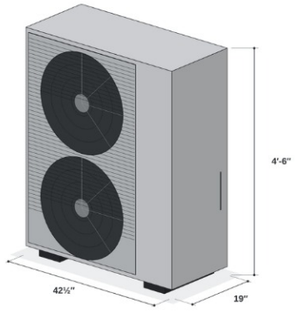

2 heat pumps

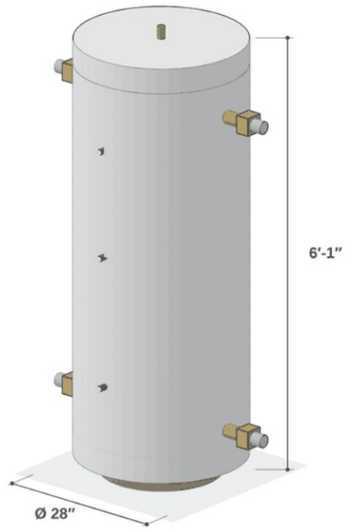

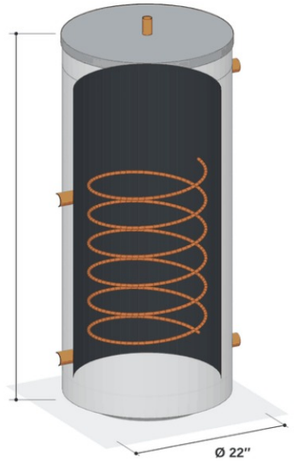

Storage + hot water

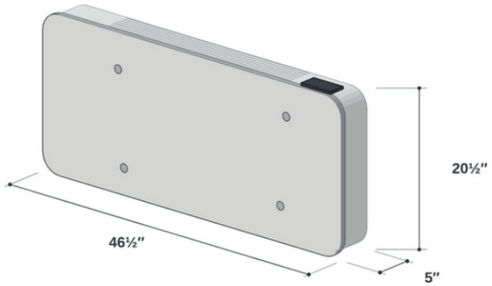

Apartment A

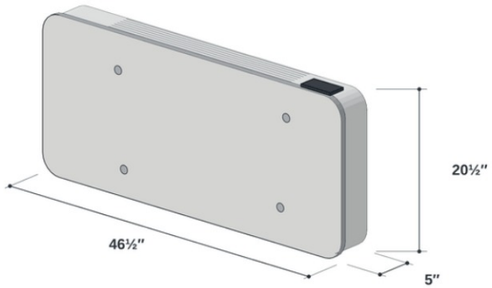

Apartment B

Fan coils

Balance of plant



Pumps

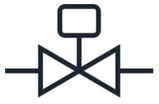

Valves



Relays

Simplified. With the indirect tank it is a multifunction multiplex: heating, cooling and hot water. In this building each plant has two heat pumps and serves about 12 apartments

Three multifunction plants serve 35 apartments

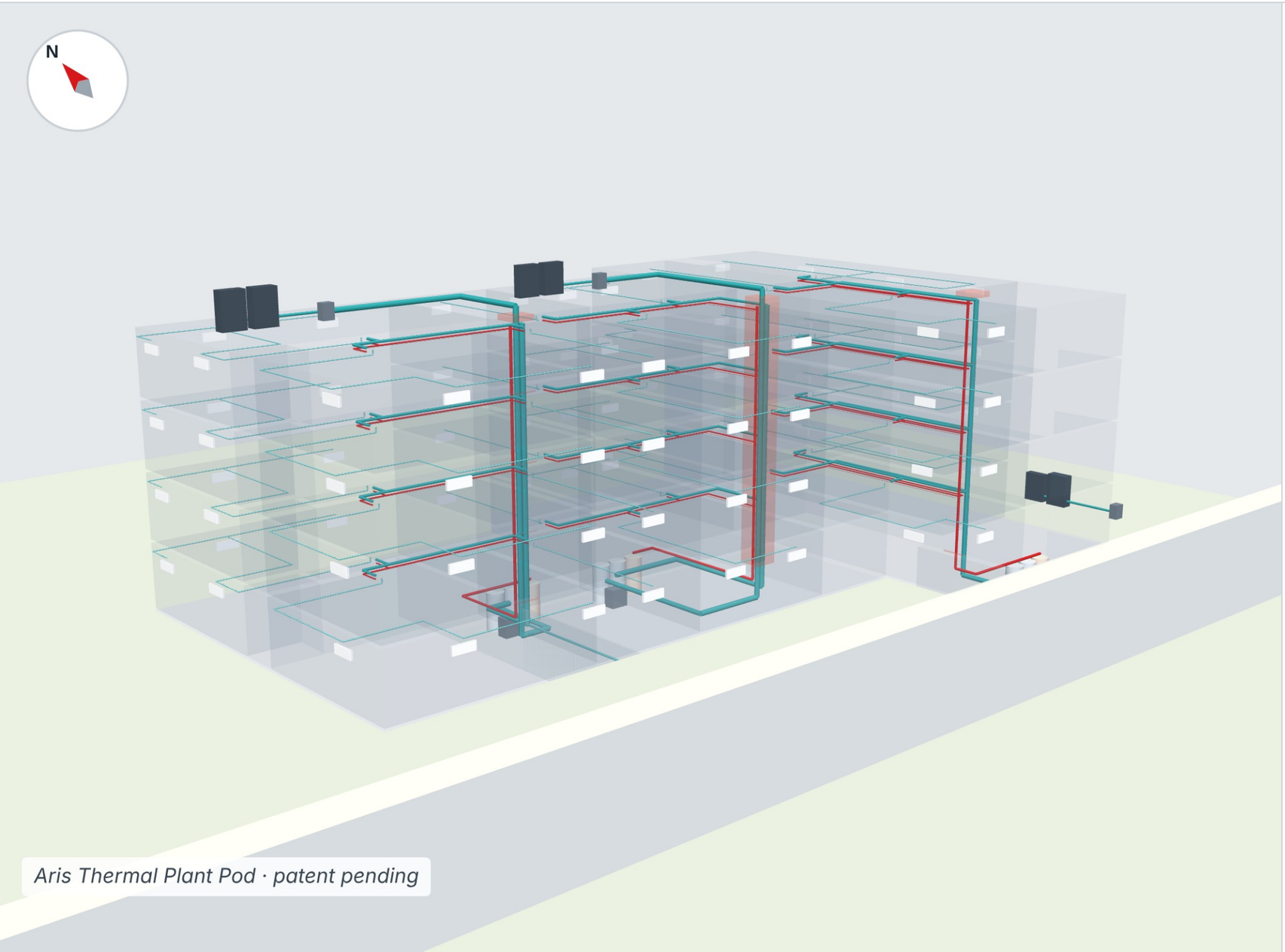

Aris Thermal Plant Pod · patent pending

3 multifunction plants

84 fan coils

0 refrigerant lines inside

Equipment schedule

3	monoblock air-to-water heat pumps	24 kW	(6¾ tons)
3	monoblock air-to-water heat pumps	5-ton	(5 tons)
6	thermal storage tanks, 2 per plant		
3	hot water storage tanks, 1 per plant	240 gal each	
84	fan coils, one per room		

Alternative: central storage, hot water made in each apartment

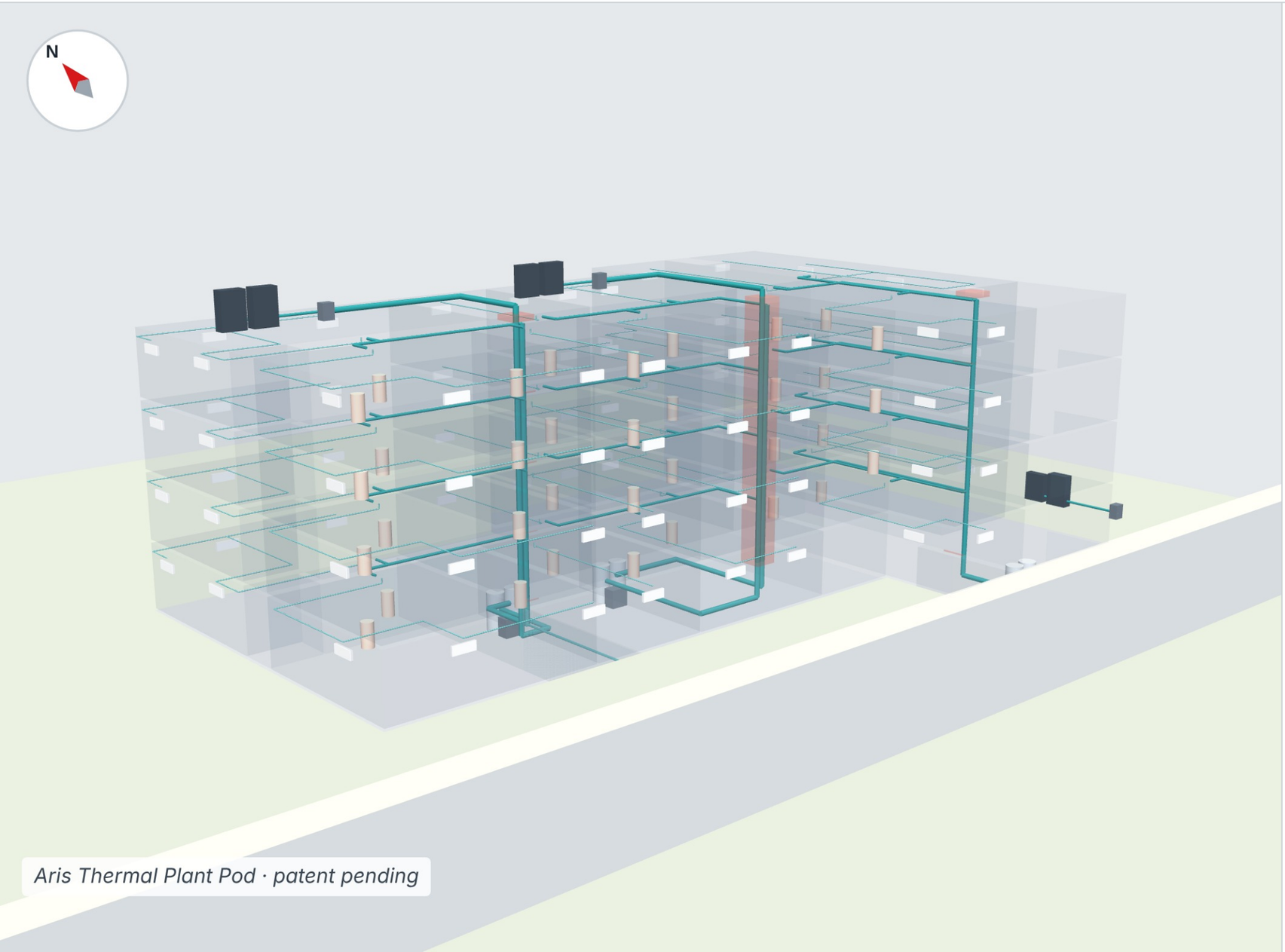

Aris Thermal Plant Pod · patent pending

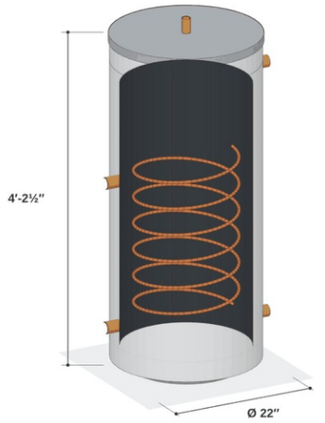

Indirect hot water tank (cutaway)

Equipment schedule

3	monoblock air-to-water heat pumps	24 kW	(6¾ tons)
3	monoblock air-to-water heat pumps	5-ton	(5 tons)
6	thermal storage tanks, 2 per plant		
35	indirect hot water tanks, 1 per apartment	50 gal each	
0	recirculation loops		
84	fan coils		

Fully distributed: thermal storage and hot water in one tank in each apartment

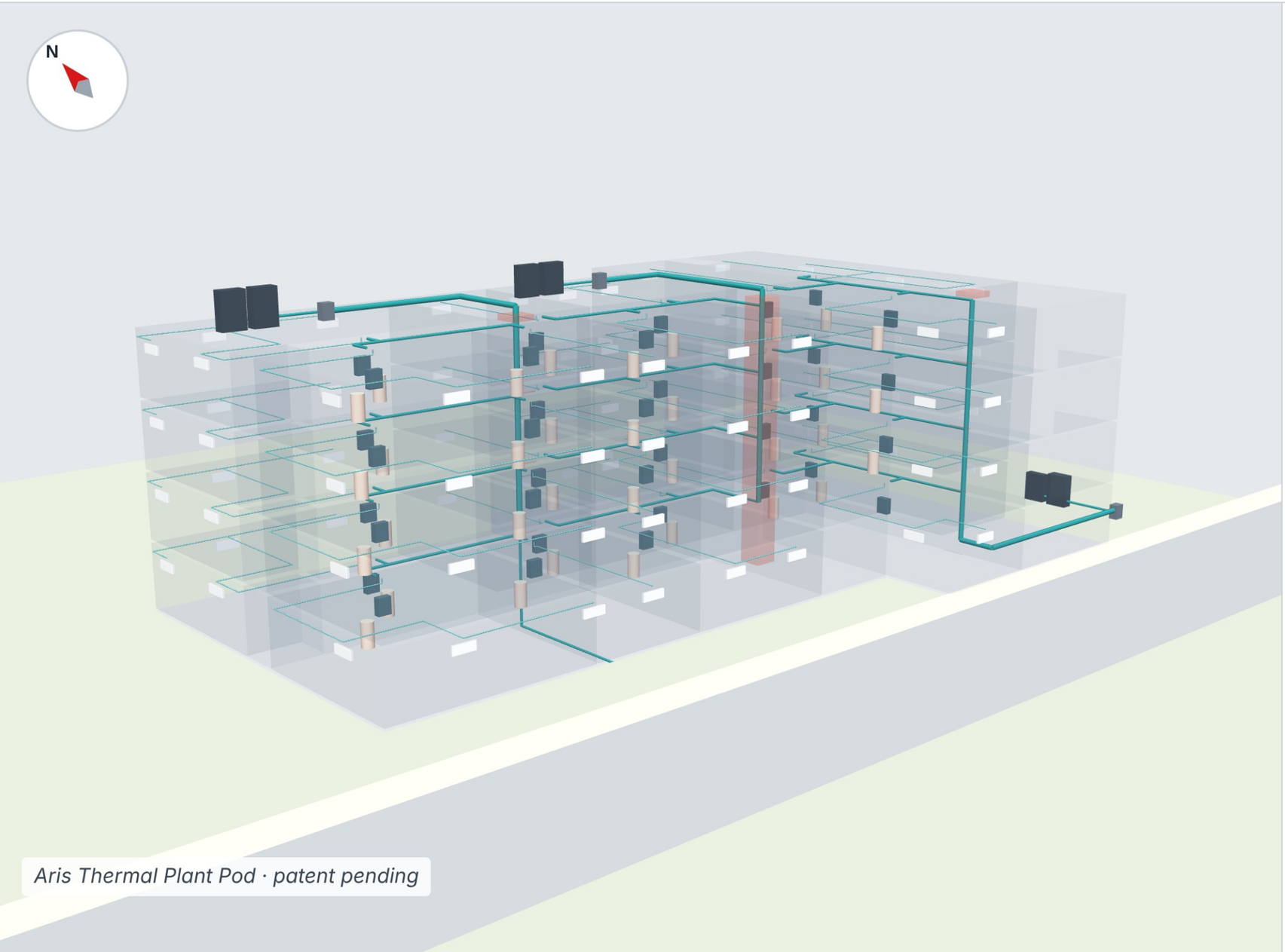

Aris Thermal Plant Pod · patent pending

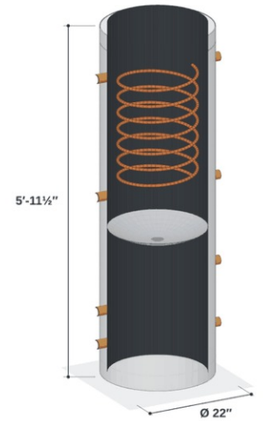

Multi-chamber tank (cutaway)

Equipment schedule

3	monoblock air-to-water heat pumps	24 kW	(6¾ tons)
3	monoblock air-to-water heat pumps	5-ton	(5 tons)
0	plant storage tanks		
35	multi-chamber tanks, 1 per apartment	30 + 40 gal	
35	distribution modules		
84	fan coils		

Room by room: wall heads come in fixed steps; fan coils follow each room’s load

Multi-split

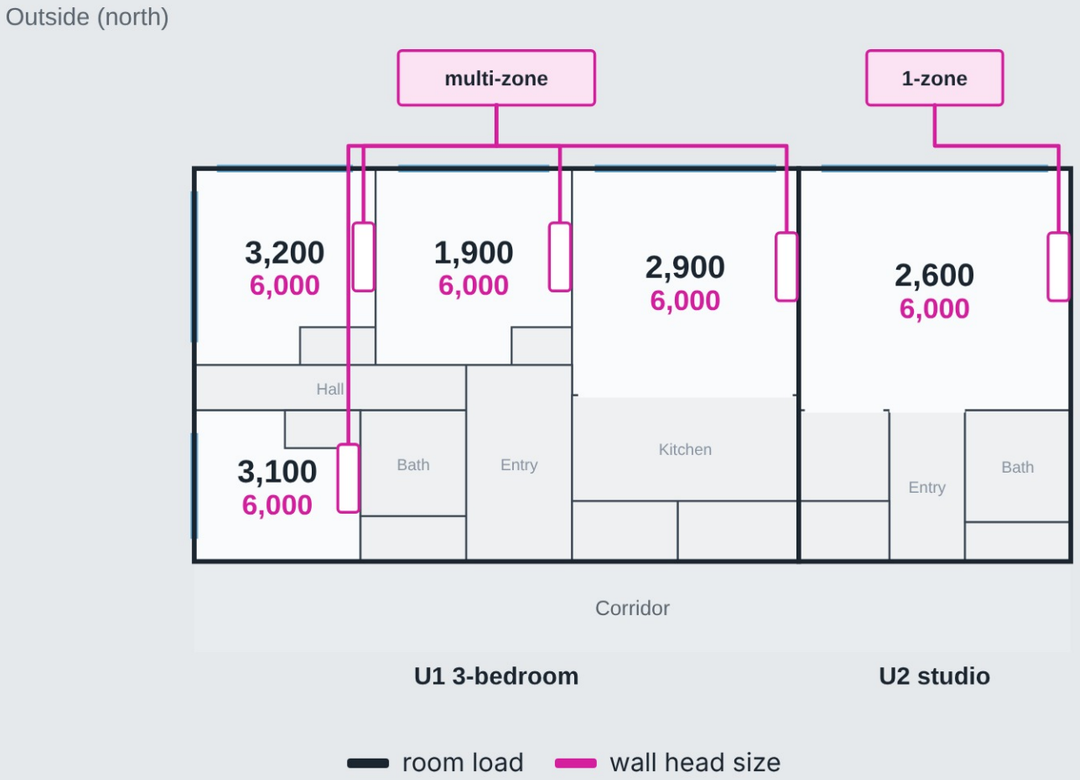

Multiplex

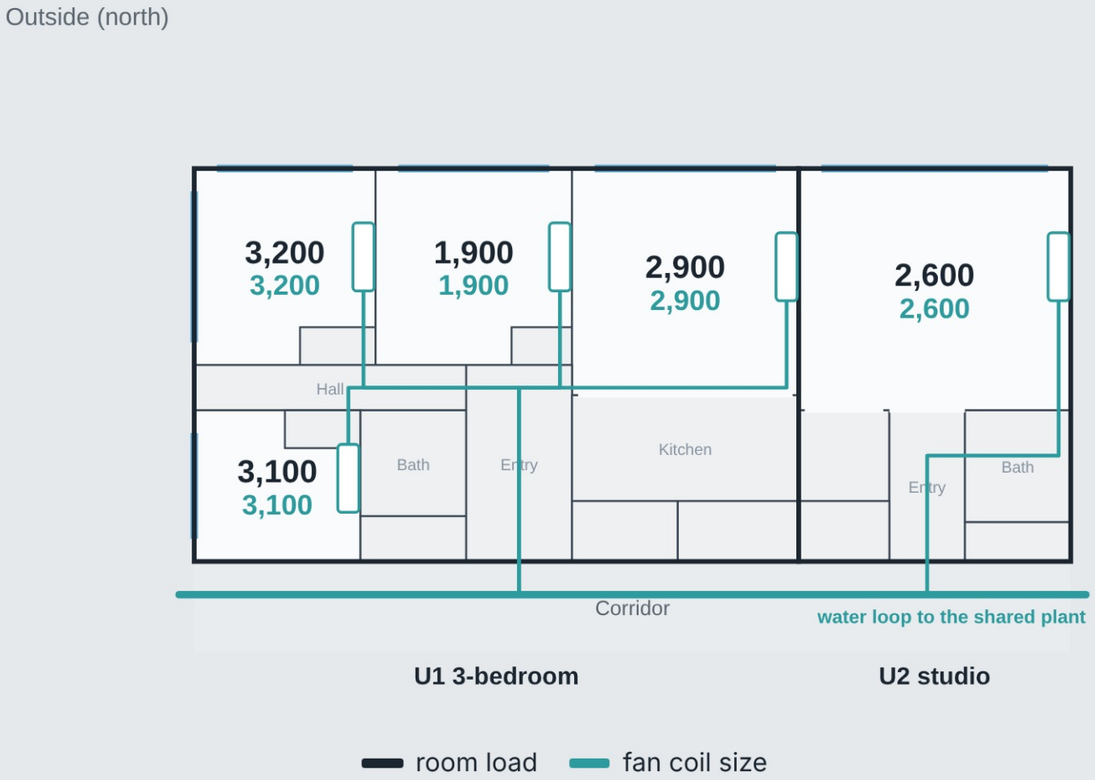

In each room: design cooling load (black) and the unit installed for it, Btu/h. Same two apartments, floor 2.

The big picture again: heating, cooling and hot water together

Each design with combined heating, cooling and hot water, seen through its compressors and indoor refrigerant coils. Magenta marks both.

Multi-split, water heater per apartment: 72 compressors, 87 indoor refrigerant coils

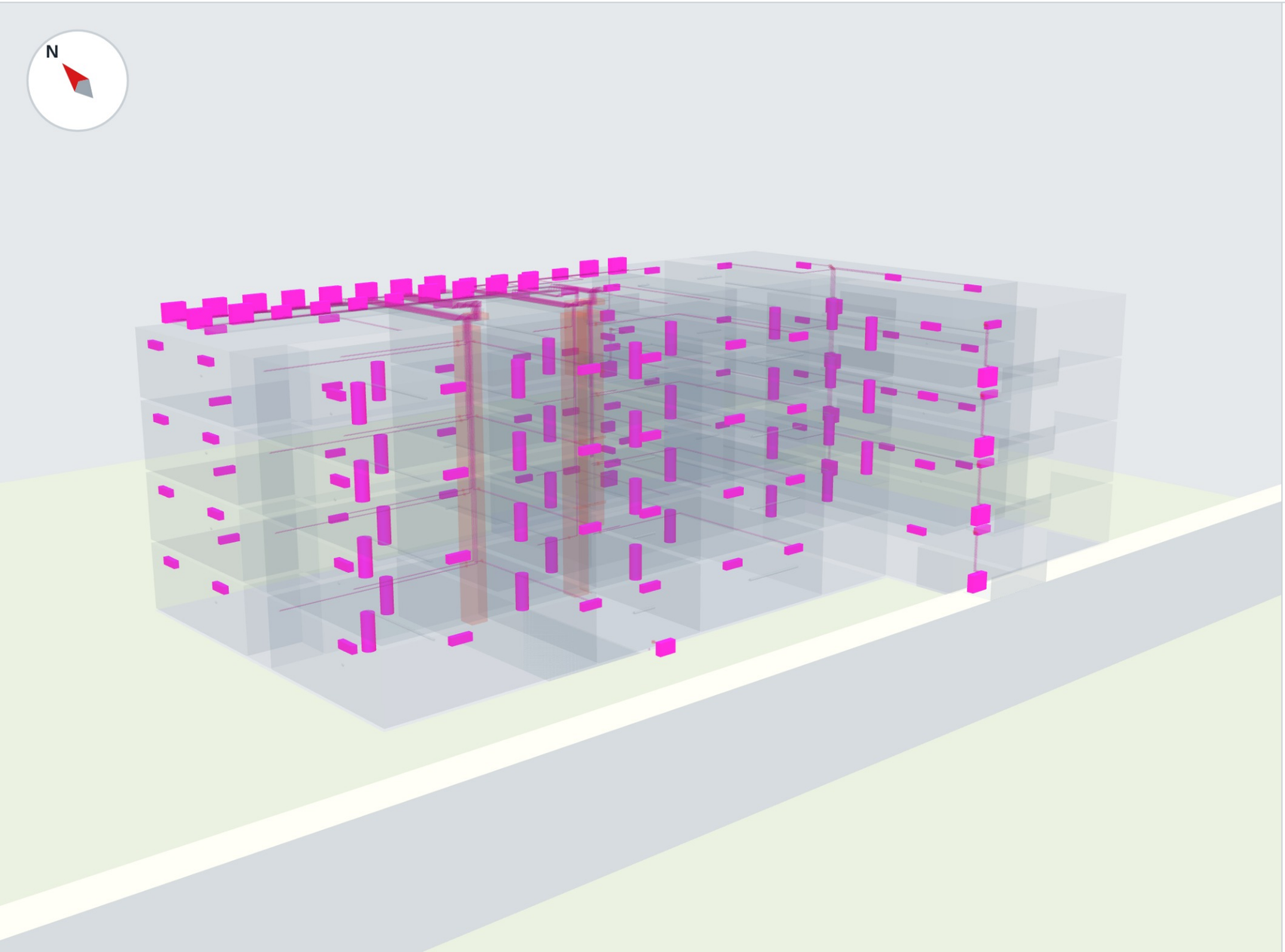

72 compressors

87 indoor refrigerant coils

497 kVA of compressor breakers

Magenta: every compressor and indoor refrigerant coil. Refrigerant pounds and copper feet to come.

Multi-split, central hot water: 39 compressors, 35 fewer in the apartments

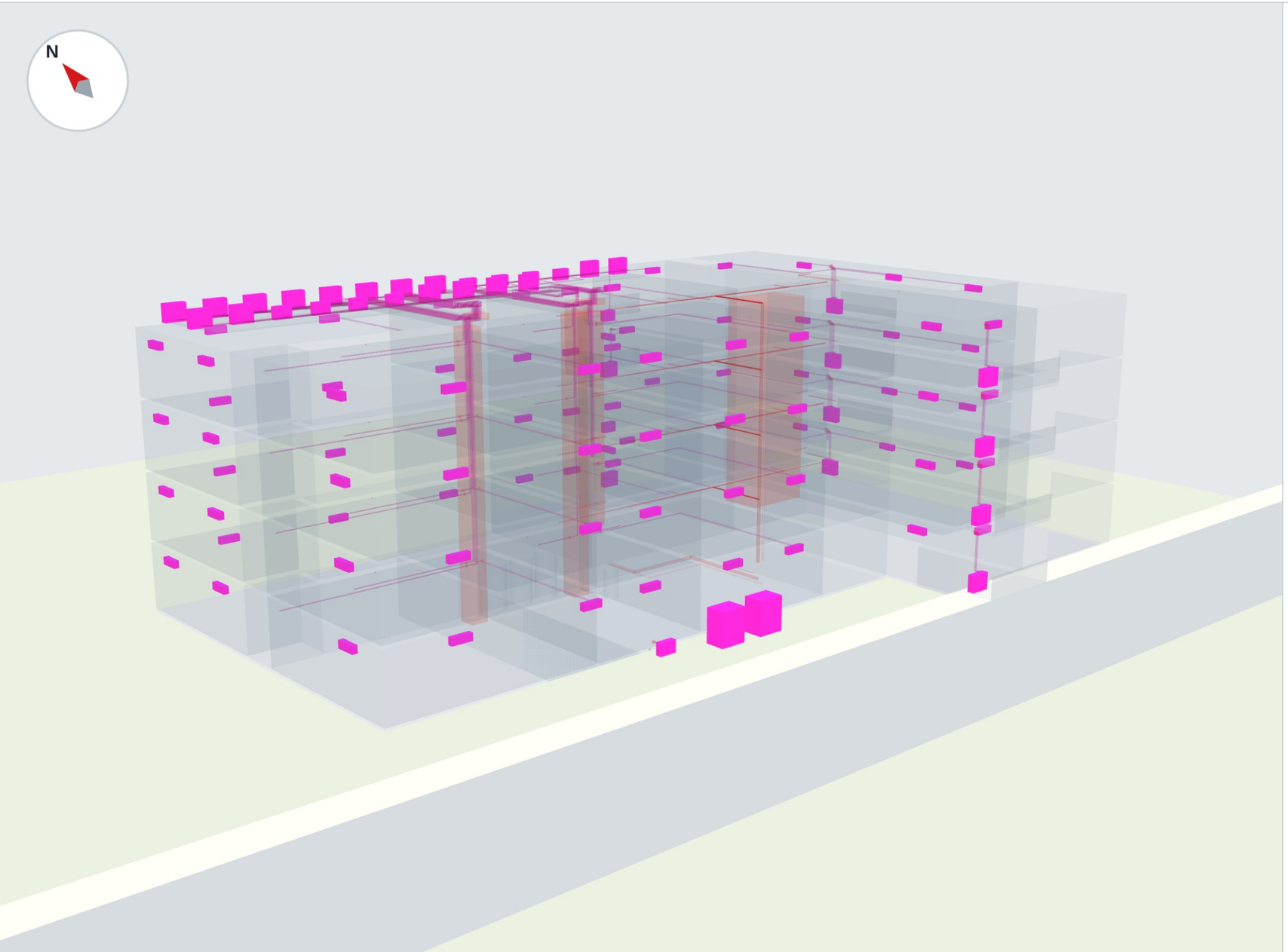

39 compressors

87 indoor refrigerant coils

269 kVA of compressor breakers

Magenta: every compressor and indoor refrigerant coil. Refrigerant pounds and copper feet to come.

Ducted split, water heater per apartment: 72 compressors, 37 indoor refrigerant coils

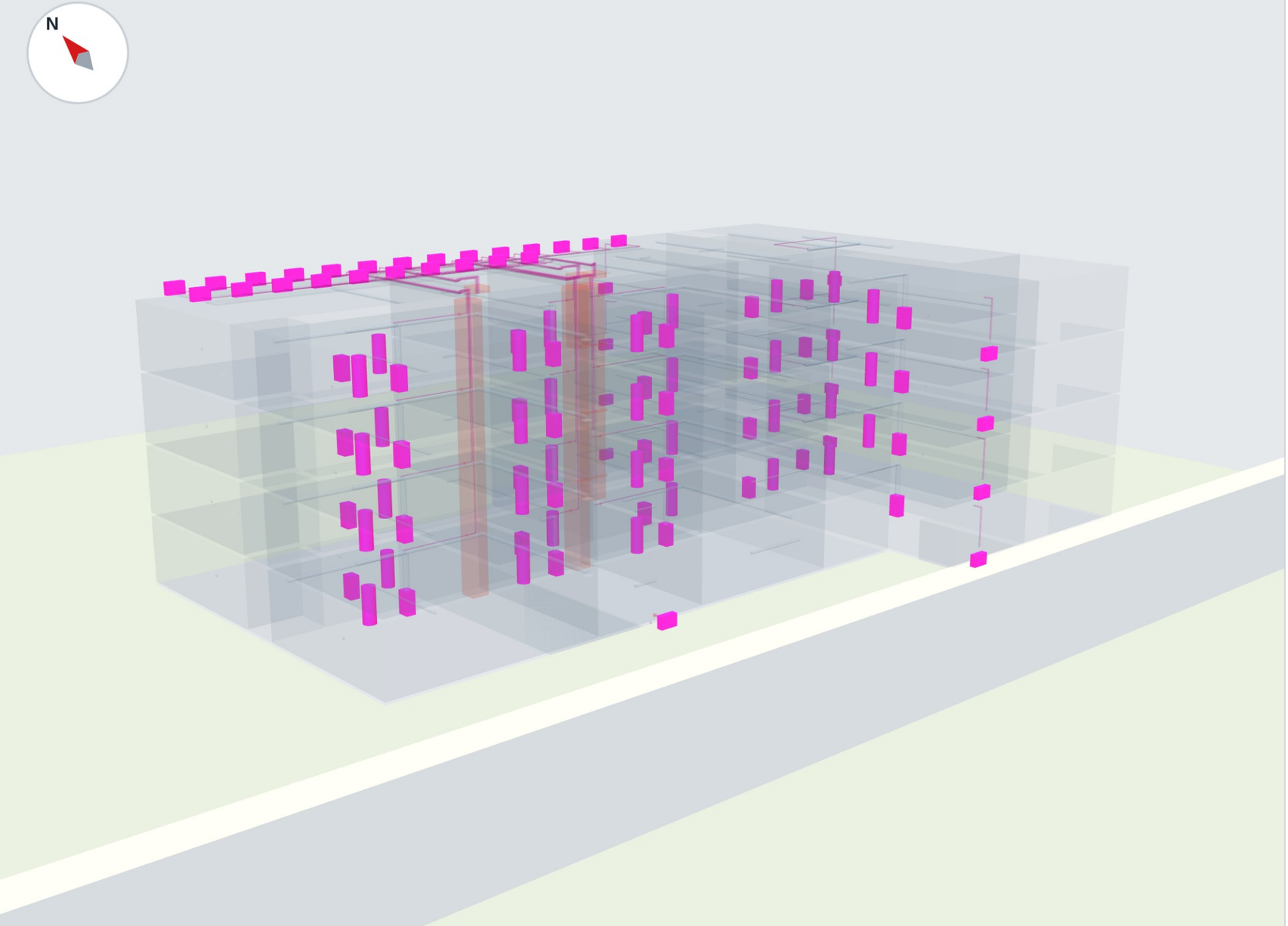

72 compressors

37 indoor refrigerant coils

387 kVA of compressor breakers

Magenta: every compressor and indoor refrigerant coil. Refrigerant pounds and copper feet to come.

Packaged, central hot water: no refrigerant lines inside, 43 units serviced in apartments

aris

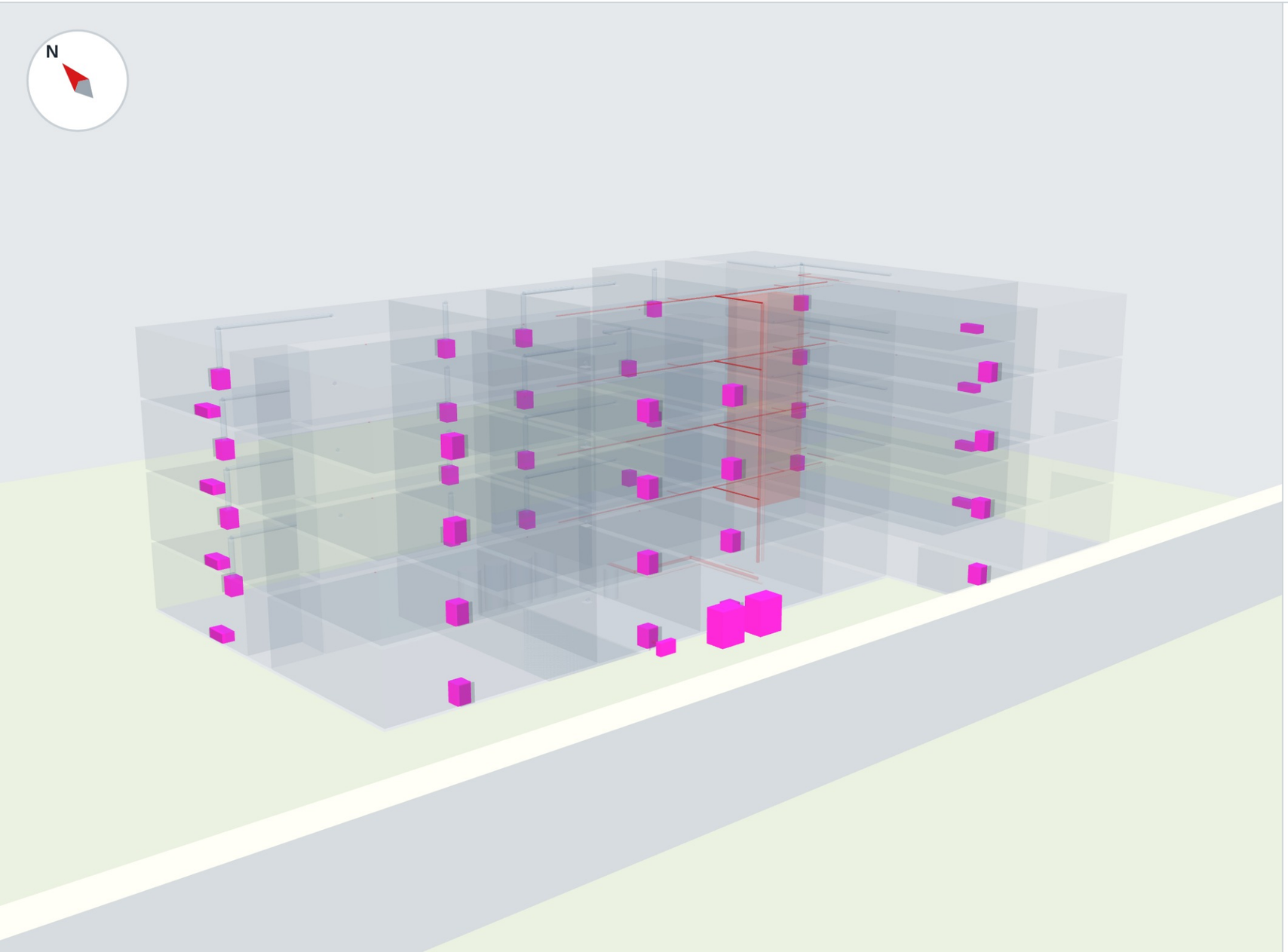

47 compressors

1 indoor refrigerant coils

271 kVA of compressor breakers

Magenta: every compressor and indoor refrigerant coil. Refrigerant pounds and copper feet to come.

Window and wall-mounted, central hot water: 89 compressors, 1 indoor refrigerant coil

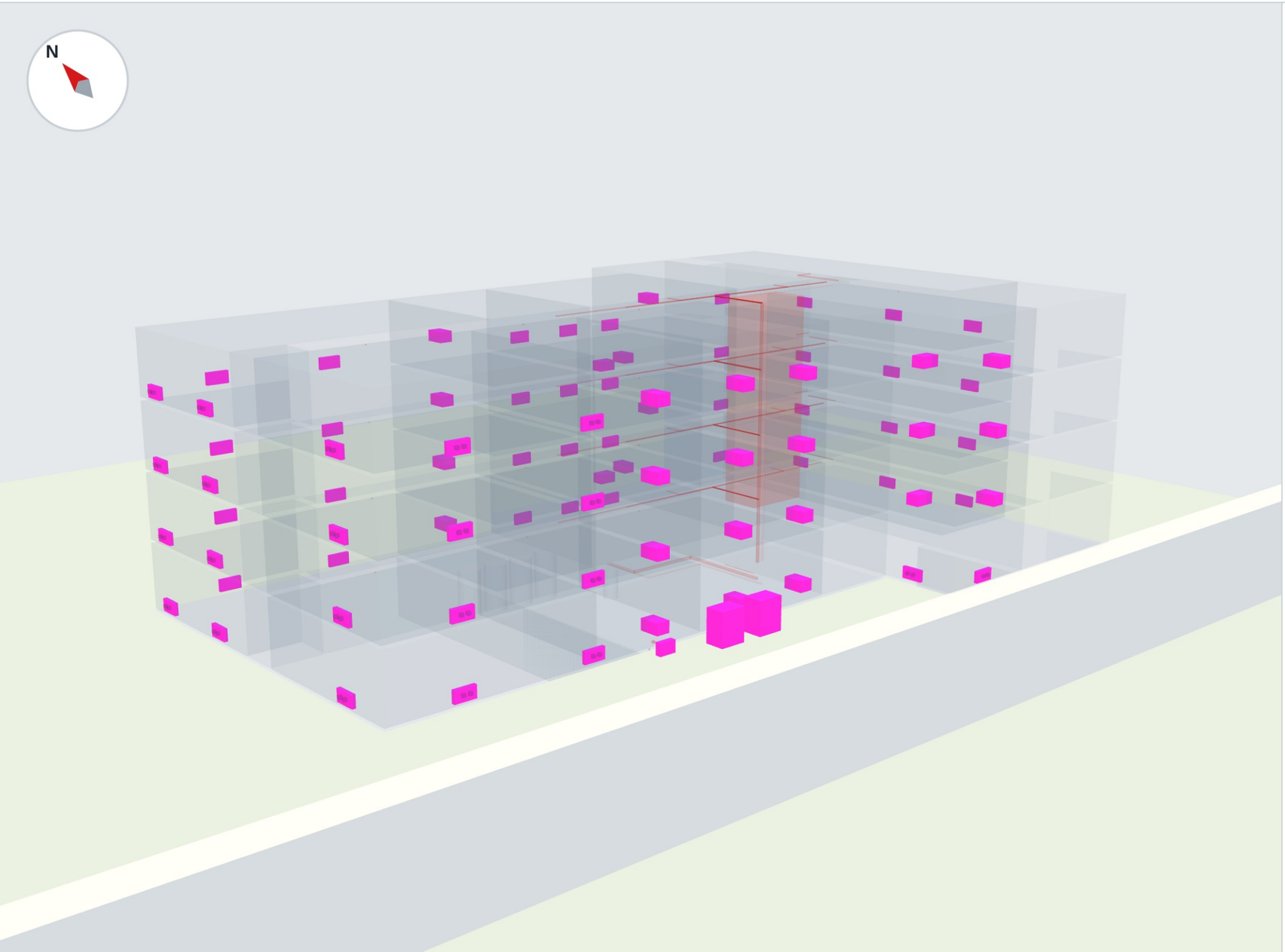

89 compressors

1 indoor refrigerant coils

345 kVA of compressor breakers

Magenta: every compressor and indoor refrigerant coil. Refrigerant pounds and copper feet to come.

Multiplex: 6 compressors, no refrigerant inside

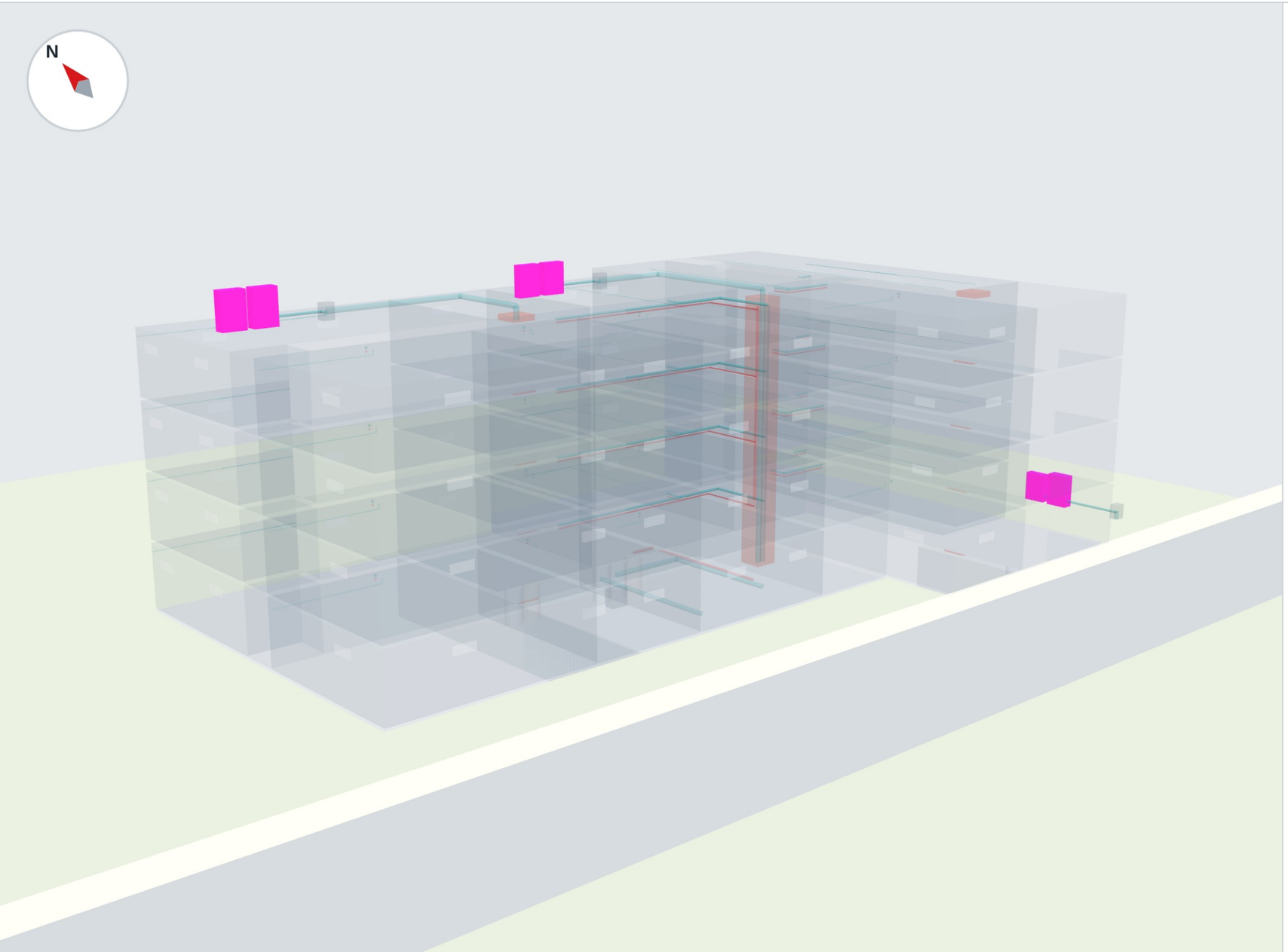

6 compressors

0 indoor refrigerant coils

86 kVA of compressor breakers

Magenta: every compressor and indoor refrigerant coil. Refrigerant pounds and copper feet to come.

6 compressors instead of 39 to 89



Compressors in each design, common spaces included.

Compressor breakers: 269–497 kVA separate, 86 kVA shared



Sum of branch-circuit breakers for compressor equipment.

Same delivered energy, 17–65% less installed capacity with a shared plant



Installed rated capacity, Btu/h. Each design delivers about 820–847 million Btu of heating, cooling and hot water over the same year. Share of installed capacity used over the year: 8%, 11%, 10%, 18%, 12%, 22% in the order shown.

Sizing each apartment on its own buys 51k to cover a 30k load

aris

One unit per apartment

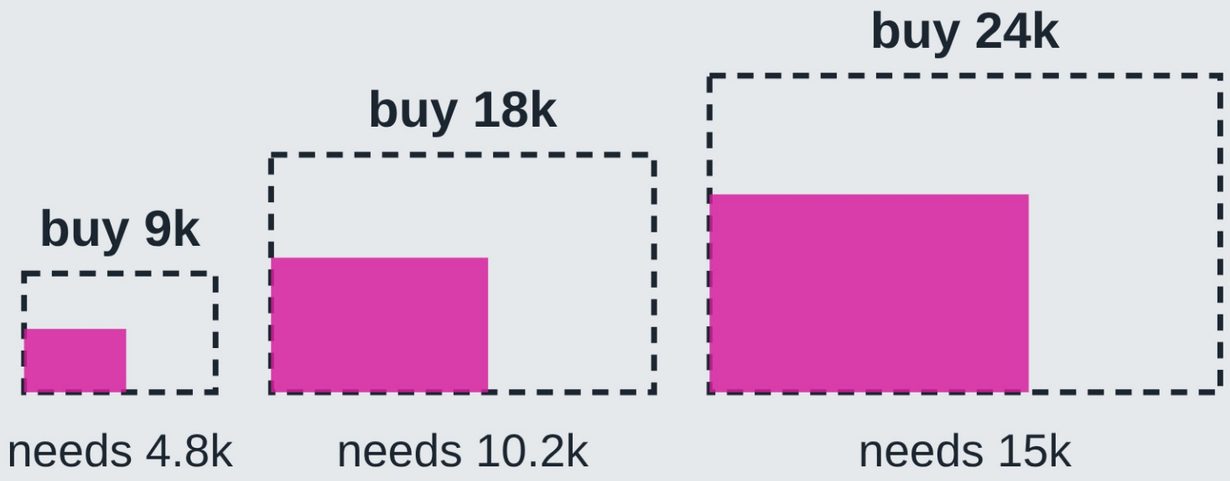

51k Btu/h bought for 30k of load

One shared plant



36k Btu/h bought for the same 30k

Illustrative. Peak loads in Btu/h at design temperature; boxes are the next available size that meets each peak.

Separate equipment installs up to 4.4× the heating peak and 2.8× the cooling peak

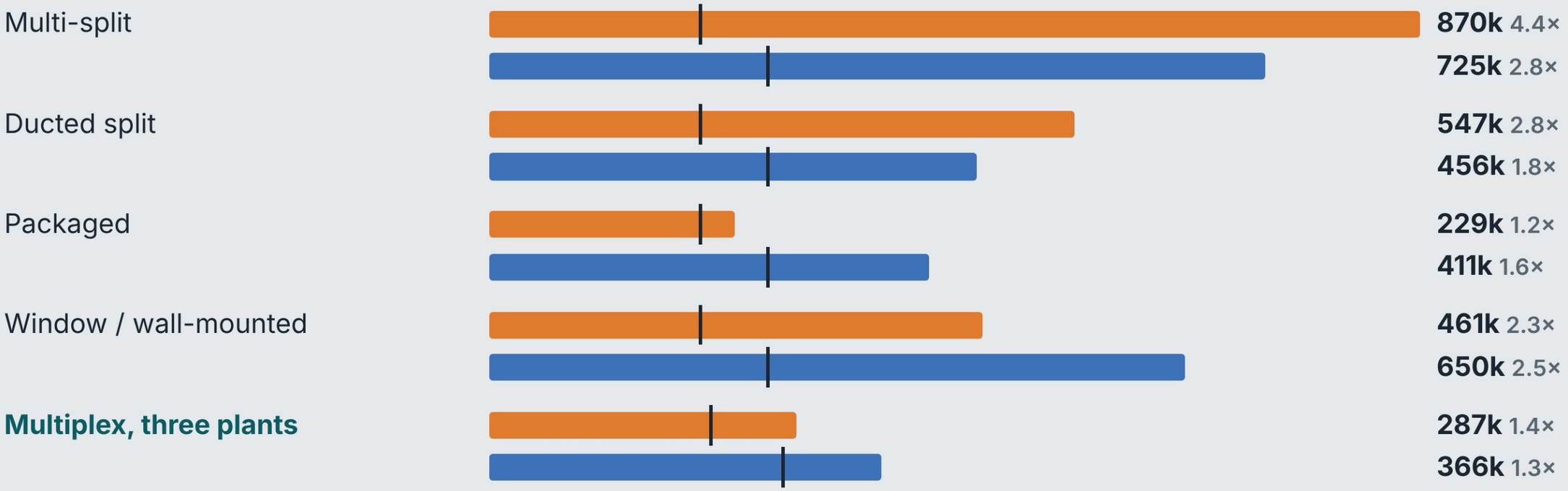

■ heat pump heating capacity at 21.9°F vs peak heating 197k · ■ cooling capacity at 91°F vs peak cooling 259k (tick marks). Apartments only; multiplex plants also carry common spaces (peak line includes them) and hot water. Btu/h.

Storage spreads the morning hot water peak across the day

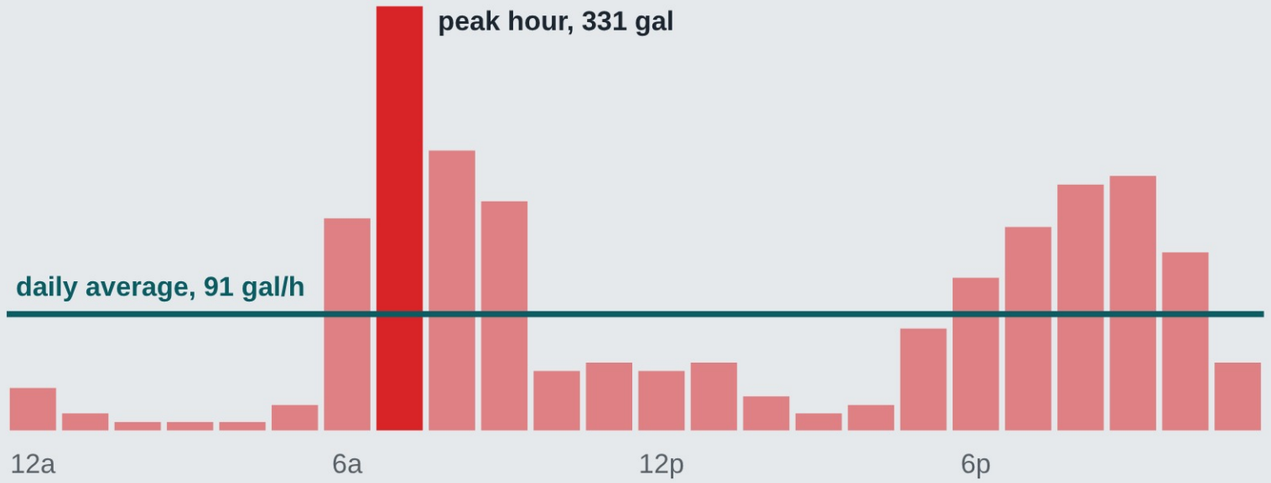

This building's design day: 2,177 gallons at 120°F, Ecotope Ecosizer method.

Without storage, equipment is sized to the peak hour.

With storage, a shared plant can be sized closer to the average and recharge between peaks.

Hot water adds compressors to every other design; multiplex adds tanks

Peak hour: 331 gallons, about 200k Btu

Water heater in each apartment

538k added

- 35 more compressors, in apartments
- about 1,750 gal in 35 tanks

Central CO2

120k added

- 2 CO2 heat pumps outdoors
- central storage and a swing tank cover the rest of the peak

Multiplex

0 added

- 720 gal stored at 140°F, about 920 gal at 120°F at the tap
- about 81k of plant heating capacity to spare at the 21.9°F design hour recharges it

Storage, not extra compressors, covers the morning peak. Multiplex hot water storage is the 240 gal per plant specified; not yet in the annual model.

Takeaways: what a shared plant gives you

aris

- Fewer compressors, all outdoors
- No refrigerant lines in the building
- One round-up in sizing, not one per apartment
- Storage can carry the hot water peak
- Much less breaker capacity
- Higher use of what is installed

Current challenges for multiplex

- Sub-metering: allocating shared plant energy to each apartment
- Trade scope: plumbing, HVAC, electrical and controls all touch one system
- Existing knowledge base: few designers and installers have built one

Research underway on shared heat pump plants for multifamily

Veterans' Place, Montpelier, VT
Began as a cold-climate heat pump study; now testing a multiplex system · US DOE, Berkeley Lab, Efficiency Vermont, GTI Energy, Emanant Systems

Smaller multifamily building demonstration
New York · NYSERDA, RMI

R-290 multifunction heat pump
Air-to-water for multifamily · California Energy Commission, AEA, RMI, Emanant Systems

Multifamily combi modeling
Net Zero Fellowship · Energy Trust of Oregon



Veterans' Place: three plant modules in the basement



Veterans' Place: outdoor heat pumps on a rack

Completed research on the Aris Thermal Plant Pod

DOE EAS-E Home Electrification Prize

Grand Prize, 2024 · modular multifunction air-to-water heat pump systems

DOE SBIR Phase I

DE-SC0025065 · completed May 2025

CalSEED Concept Award

Advanced data and controls for multifunction multifamily heat pump systems · completed February 2026

24% less electricity, January–February

LBNL EnergyPlus model, Thermal Plant Pod vs. a baseline heat pump system, 4-story 8-unit building, Brooklyn, NY (climate zone 4A). Same thermal loads; peak demand about the same (+3%).



Prototype Thermal Plant Pod: tanks, piping and controls



Prototype pod with its outdoor heat pump

Discussion

Questions

Robert Benjamin · Aris Hydronics

robert@arishydronics.com
www.ariscomfort.com